TCL SOLAR

S Class Solar Panel

Product: TCL-MGxxxDT210-68NS

700–725 W | Up to 23.1% efficient

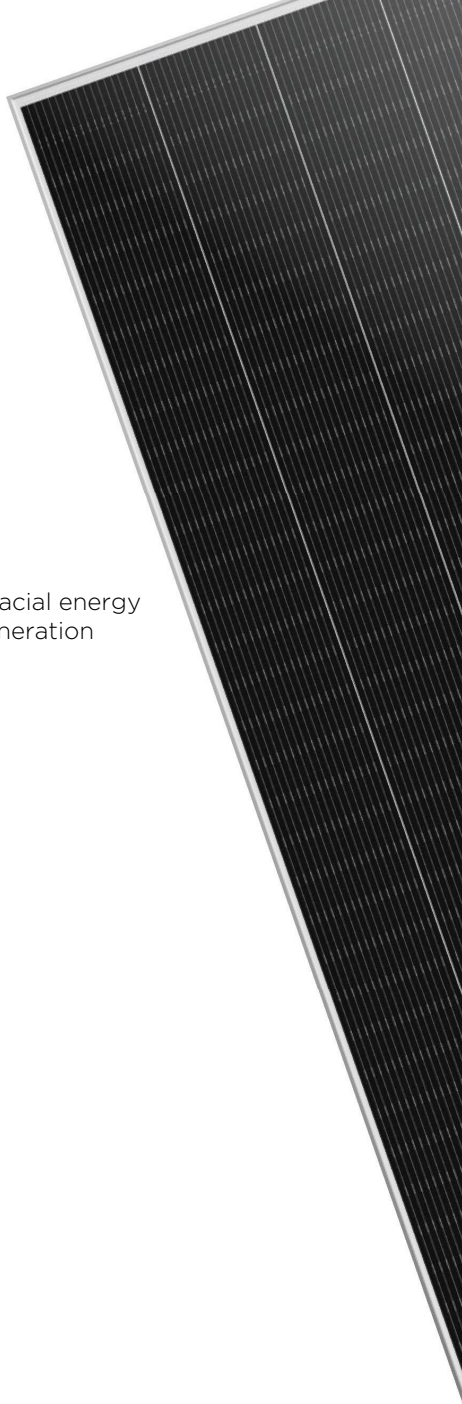

Ideal for commercial applications

Framed glass-glass

One-third cut, shingled-cell design

Bifacial energy generation

High energy yield

- Consistent energy production across all weather conditions
- Bifacial energy generation and shingled-cell design

Proven design

- Better shading response
- High-durability frame and heat-strengthened glass

Reliable operation

- Rigorous supply chain qualification procedures
- Easy to install
- Backed by a bankable company

Comprehensive warranty coverage

Product and power coverage	15-30 years
Year 1 minimum warranted output	99.0%
Maximum annual degradation	0.40%

S CLASS POWER: 700–725 W | EFFICIENCY: Up to 23.1%

Electrical Data, Front STC Characteristics[1]						
	TCL-MG725DT210-68NS	TCL-MG720DT210-68NS	TCL-MG715DT210-68NS	TCL-MG710DT210-68NS	TCL-MG705DT210-68NS	TCL-MG700DT210-68NS
Nominal Power (Pnom)[2]	725 W	720 W	715 W	710 W	705 W	700 W
Power Binning	+3/0%	+3/0%	+3/0%	+3/0%	+3/0%	+3/0%
Panel Efficiency	23.1%	22.9%	22.7%	22.6%	22.4%	22.3%
Rated Voltage (Vmpp)	42.40 V	42.20 V	42.20 V	41.80 V	41.60 V	41.40 V
Rated Current (Impp)	17.11 A	17.07 A	17.03 A	17.00 A	16.96 A	16.92 A
Open-Circuit Voltage (Voc)[2]	49.60 V	49.50 V	49.40 V	49.30 V	49.10 V	48.90 V
Short-Circuit Current (Isc)[2]	17.99 A	17.98 A	17.97 A	17.96 A	17.92 A	17.88 A

BNPI Data[3]						
Nominal Power (Pmax)[2]	799 W	794 W	789 W	783 W	778 W	772 W
Open-Circuit Voltage (Voc)[2]	49.75 V	49.64 V	49.56 V	49.43 V	49.25 V	49.04 V
Short-Circuit Current (Isc)[2]	19.83 A	19.82 A	19.81 A	19.80 A	19.76 A	19.71 A

Bifacial Gain[4]						
Pmax with 5% Bifacial Gain	761 W	756 W	751 W	746 W	740 W	735 W
Isc with 5% Bifacial Gain	18.89 A	18.88 A	18.87 A	18.86 A	18.82 A	18.77 A
Pmax with 10% Bifacial Gain	798 W	792 W	787 W	781 W	776 W	770 W
Isc with 10% Bifacial Gain	19.79 A	19.78 A	19.77 A	19.76 A	19.71 A	19.67 A

Electrical Data	
Bifaciality (ϕPmax/ϕIsc)	80% +/–10%
Bifaciality (ϕVoc)	98% +/–2%
Maximum System Voltage	1500 V IEC
Testing Temperature	–40°C to +85°C
Operation Temperature	–40°C to +70°C (IEC TS 63126)
Maximum Series Fuse	35 A
Power Temp. Coef.	–0.29% / °C
Voltage Temp. Coef.	–0.25% / °C
Current Temp. Coef.	0.045% / °C

Mechanical Data	
Solar Cells	N-Type TOPCon Shingle
Glass	2.0 mm + 2.0 mm, high transmission heat strengthened glass, AR coating on front glass
Junction Box	IP-68, 3 bypass diodes
Connector	Stäubli MC4-EVO2
Weight	38.4 kg
Max. Load[5]	Wind: 2400 Pa, 245 kg/m² front & back Snow: 5400 Pa, 550 kg/m² front
Impact Resistance	25 mm diameter hail at 23 m/s
Frame	Anodized Aluminum Alloy

Packaging Configuration	
Number of modules per pallet	33
Number of pallets per 40ft HQ container	20
Number of modules per container	594

Tests And Certifications	
Standard Tests	IEC 61215, IEC 61730
Fire Rating	Class A (IEC 61730-2 / UL 790)
Protection Class	Class II (IEC 61140)
Quality Certs	ISO 9001:2015, ISO 14001:2015
EHS Compliance	ISO 45001-2018, Recycling Scheme

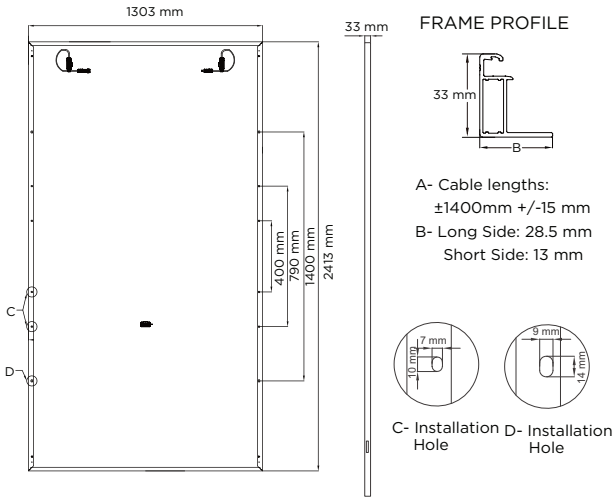

Please read the safety and installation instructions.
Visit www.sunpowerglobal.com/PVInstallGuide.
Paper version can be requested through
techsupport.EN@sunpowerglobal.com

1 Standard Test Conditions (1000 W/m² irradiance, AM 1.5, 25° C). NREL calibration Standard: SOMS current, LACCS FF and Voltage.
2 Measurement tolerances (Pmax/Voc +/-3%, Isc +/-4%).
3 BNPI Test Condition (front 1000 W/m², rear 135 W/m² irradiance, AM 1.5, 25° C).
4 The additional gain from the back side of the panel compared to the power of the front side of the panel at the standard test conditions. It depends on mounting (structure, height, tilt angle etc.) and albedo of the underlying surface.
5 Test load as per IEC 61215-2 is equal to design load with safety factor = 1.5. See "Safety and Installation Instructions" for details.

TCL SOLAR

Specifications included in this datasheet are subject to change without notice.
©2025 TCL SunPower Global. All Rights Reserved.

554529 REV A / A4_EN
Publication Date: May 2025