R32
MULTI SPLIT

OUTDOOR UNITS

R32

MU2R15
MU2R17

(Unit : mm)

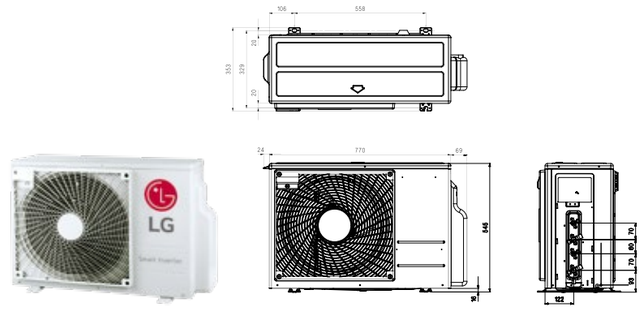

LG participates in the ECP programme for EUROVENT AC program.
Check ongoing validity of certification
: www.eurovent-certification.com

OUTDOOR UNIT				MU2R15.UL0	MU2R17.UL0
Compressor	Type			Twin Rotary	Twin Rotary
Capacity *	Cooling	Min / Nom / Max	kW	0.9 / 4.1 / 4.7	0.9 / 4.7 / 5.4
	Heating	Min / Nom / Max	kW	1.0 / 4.7 / 5.4	1.0 / 5.3 / 5.7
Low Temperature Capacity	Heating -7°C	Max	kW	3.3	3.7
Power Input *	Cooling	Min / Nom / Max	kW	0.2 / 1.0 / 1.4	0.2 / 1.3 / 1.7
	Heating	Min / Nom / Max	kW	0.2 / 1.1 / 1.4	0.2 / 1.3 / 1.6
Running Current	Cooling	Min / Nom / Max	A	1.1 / 4.6 / 6.4	1.1 / 5.6 / 7.9
	Heating	Min / Nom / Max	A	1.1 / 4.9 / 6.6	1.1 / 5.5 / 7.6
EER				4.14	3.75
COP				4.38	4.22
SEER				8.50	7.80
SCOP				4.20	4.20
Pdesign (@-10°C)			kW	4.10	4.10
Seasonal Energy Label	Cooling / Heating (A+++ to D Scale)			A+++ / A+	A++ / A+
Annual Energy Consumption	Cooling / Heating			169 / 1,367	210 / 1,367
Airflow Rate	Nom		m^3/min	28.2	28.2
Sound Pressure	Cooling	Nom	dB(A)	48	48
	Heating	Nom	dB(A)	51	51
Sound Power	Cooling	Max	dB(A)	61	63
Dimensions	W x H x D		mm	770 x 545 x 288	770 x 545 x 288
Net Weight			Kg	36	36
Refrigerant	Type			R32	R32
	Charge		Kg	1.1	1.1
	Additional Charge		g/m	20	20
	GWP			675	675
	t-CO_2 eq			0.74	0.74
Operation Range (Outdoor)	Cooling	Min / Max	°C DB	-10 / 48	-10 / 48
	Heating	Min / Max	°C WB	-18 / 18	-18 / 18
Power Supply			V, Ø, Hz	220-240, 1, 50	220-240, 1, 50
Power Supply Cable			No. x mm^2	3C x 2.5	3C x 2.5
Transmission Cable			No. x mm^2	4C x 0.75	4C x 0.75
Circuit Breaker			A	15	15
Piping Length Total			m	30	30
Piping Length per Branch		Max	m	20	20
Piping Elevation Difference	IDU - ODU	Max	m	15	15
	IDU - IDU	Max	m	7.5	7.5
Piping Connection	Liquid		mm(inch) x No.	Ø6.35 (1/4) x 2	Ø6.35 (1/4) x 2
	Gas		mm(inch) x No.	Ø9.52 (3/8) x 2	Ø9.52 (3/8) x 2

Notes :
1. Capacities are based on the following conditions:
   Cooling : - Indoor Temperature 27°C (80.6°F) DB / 19°C (66.2°F) WB - Outdoor Temperature 35°C (95°F) DB / 24°C (75.2°F) WB
   Heating : - Indoor Temperature 20°C (68°F) DB / 15°C (59°F) WB - Outdoor Temperature 7°C (44.6°F) DB / 6°C (42.8°F) WB
   Piping Length - Interconnecting Piping Length 7.5m - Level Difference of Zero.
2. * : See page "Combination Table".
3. Due to our policy of innovation some specifications may be changed without notification.
4. At least two indoor units should be connected
5. Minimum combination ratio should be more than 40%.
6. This product contains fluorinated greenhouse gases (R32)

OUTDOOR UNITS

R32

MU3R19
MU3R21
MU4R25

(Unit : mm)

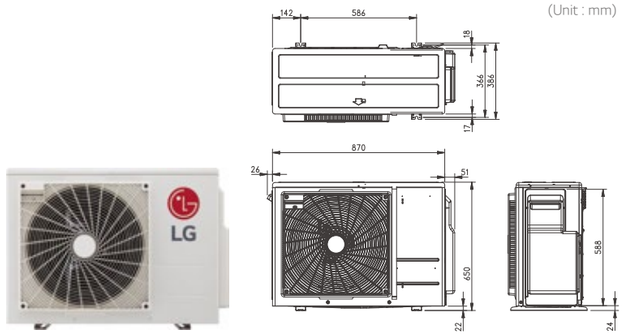

OUTDOOR UNIT				MU3R19.U21	MU3R21.U21	MU4R25.U21
Compressor	Type			Twin Rotary	Twin Rotary	Twin Rotary
Capacity *	Cooling	Min / Nom / Max	kW	1.1 / 5.3 / 6.3	1.1 / 6.2 / 7.3	1.1 / 7.0 / 8.5
	Heating	Min / Nom / Max	kW	1.2 / 6.3 / 7.3	1.2 / 7.0 / 7.8	1.2 / 8.1 / 9.1
Low Temperature Capacity	Heating -7°C	Max	kW	5.2	5.5	5.9
Power Input *	Cooling	Min / Nom / Max	kW	0.3 / 1.1 / 2.0	0.3 / 1.4 / 2.5	0.3 / 1.8 / 2.8
	Heating	Min / Nom / Max	kW	0.3 / 1.3 / 2.0	0.3 / 1.5 / 2.4	0.3 / 1.8 / 2.9
Running Current	Cooling	Min / Nom / Max	A	1.3 / 5.0 / 9.2	1.3 / 6.5 / 11.1	1.3 / 8.0 / 12.6
	Heating	Min / Nom / Max	A	1.3 / 5.7 / 9.2	1.3 / 6.9 / 10.8	1.3 / 8.3 / 12.9
EER				4.75	4.28	4.00
COP				5.00	4.60	4.40
SEER				8.50	8.50	8.00
SCOP				4.40	4.40	4.40
Pdesign (@-10°C)			kW	5.20	5.20	5.40
Seasonal Energy Label	Cooling / Heating (A+++ to D Scale)			A+++ / A+	A+++ / A+	A++ / A+
Annual Energy Consumption	Cooling / Heating			217 / 1,655	253 / 1,655	308 / 1,718
Airflow Rate	Nom		m^3/min	50	50	50
Sound Pressure	Cooling	Nom	dB(A)	48	49	50
	Heating	Nom	dB(A)	53	54	54
Sound Power	Cooling	Max	dB(A)	63	64	66
Dimensions	W x H x D		mm	870 × 650 × 330	870 × 650 × 330	870 × 650 × 330
Net Weight			Kg	46	46	46.2
Refrigerant	Type			R32	R32	R32
	Charge		Kg	1.4	1.4	1.4
	Additional Charge		g/m	20	20	20
	GWP			675	675	675
	t-CO_2 eq			0.945	0.945	0.945
Operation Range (Outdoor)	Cooling	Min / Max	°C DB	-10 ~ 48	-10 ~ 48	-10 ~ 48
	Heating	Min / Max	°C WB	-18 ~ 18	-18 ~ 18	-18 ~ 18
Power Supply			V, Ø, Hz	1 / 220-240 / 50	1 / 220-240 / 50	1 / 220-240 / 50
Power Supply Cable			No. x mm^2	3C × 2.5	3C × 2.5	3C × 2.5
Transmission Cable			No. x mm^2	4C × 0.75	4C × 0.75	4C × 0.75
Circuit Breaker			A	20	20	20
Piping Length Total			m	50	50	70
Piping Length per Branch		Max	m	25	25	25
Piping Elevation Difference	IDU - ODU	Max	m	15	15	15
	IDU - IDU	Max	m	7.5	7.5	7.5
Piping Connection	Liquid		mm(inch) x No.	Ø 6.35 (1/4) × 3	Ø 6.35 (1/4) × 3	Ø 6.35 (1/4) × 4
	Gas		mm(inch) x No.	Ø 9.52 (3/8) × 3	Ø 9.52 (3/8) × 3	Ø 9.52 (3/8) × 4

※ This Product is avable from Apr.2020

Notes :
1. Capacities are based on the following conditions:
   Cooling : - Indoor Temperature 27°C (80.6°F) DB / 19°C (66.2°F) WB - Outdoor Temperature 35°C (95°F) DB / 24°C (75.2°F) WB
   Heating : - Indoor Temperature 20°C (68°F) DB / 15°C (59°F) WB - Outdoor Temperature 7°C (44.6°F) DB / 6°C (42.8°F) WB
   Piping Length - Interconnecting Piping Length 7.5m - Level Difference of Zero.
2. * : See page "Combination Table".
3. Due to our policy of innovation some specifications may be changed without notification.
4. At least two indoor units should be connected
5. Minimum combination ratio should be more than 40%.
6. This product contains fluorinated greenhouse gases (R32)

OUTDOOR UNITS

R32

MU4R27
MU5R30

(Unit : mm)

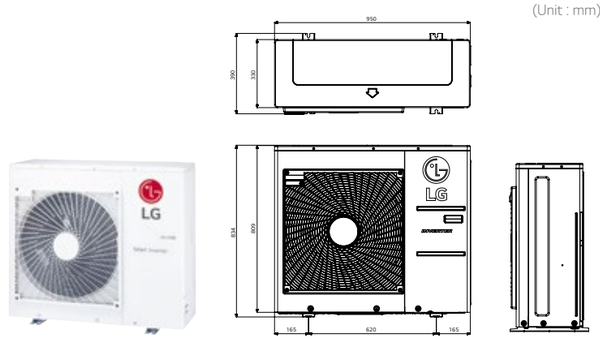

LG participates in the ECP programme for EUROVENT AC program.
Check ongoing validity of certification
: www.eurovent-certification.com

OUTDOOR UNIT				MU4R27.U40	MU5R30.U40
Compressor	Type			Twin Rotary	Twin Rotary
Capacity *	Cooling	Min / Nom / Max	kW	1.3 / 7.9 / 9.5	1.3 / 8.8 / 10.6
	Heating	Min / Nom / Max	kW	1.5 / 9.1 / 10.6	1.5 / 10.1 / 12.1
Low Temperature Capacity	Heating -7°C	Max	kW	6.4	7.1
Power Input *	Cooling	Min / Nom / Max	kW	0.4 / 1.8 / 2.9	0.4 / 2.0 / 3.4
	Heating	Min / Nom / Max	kW	0.6 / 2.1 / 3.4	0.6 / 2.2 / 3.6
Running Current	Cooling	Min / Nom / Max	A	1.9 / 8.1 / 13.1	1.9 / 9.1 / 15.2
	Heating	Min / Nom / Max	A	2.8 / 9.4 / 15.3	2.8 / 9.7 / 16.3
EER				4.39	4.40
COP				4.39	4.70
SEER				8.00	8.20
SCOP				4.20	4.20
Pdesign (@-10°C)			kW	7.00	7.40
Seasonal Energy Label	Cooling / Heating (A+++ to D Scale)			A++ / A+	A++ / A+
Annual Energy Consumption	Cooling / Heating			346 / 2,333	376 / 2,467
Airflow Rate	Nom		m^3/min	60	60
Sound Pressure	Cooling	Nom	dB(A)	50	50
	Heating	Nom	dB(A)	54	54
Sound Power	Cooling	Max	dB(A)	65	66
Dimensions	W x H x D		mm	950 x 834 x 330	950 x 834 x 330
Net Weight			Kg	61	61
Refrigerant	Type			R32	R32
	Charge		Kg	2.3	2.6
	Additional Charge		g/m	20	20
	GWP			675	675
	t-CO_2 eq			1.55	1.76
Operation Range (Outdoor)	Cooling	Min / Max	°C DB	-10 / 48	-10 / 48
	Heating	Min / Max	°C WB	-18 / 18	-18 / 18
Power Supply			V, Ø, Hz	220-240, 1, 50	220-240, 1, 50
Power Supply Cable			No. x mm^2	3C x 2.5	3C x 2.5
Transmission Cable			No. x mm^2	4C x 0.75	4C x 0.75
Circuit Breaker			A	25	25
Piping Length Total			m	70	75
Piping Length per Branch		Max	m	25	25
Piping Elevation Difference	IDU - ODU	Max	m	15	15
	IDU - IDU	Max	m	7.5	7.5
Piping Connection	Liquid		mm(inch) x No.	Ø6.35 (1/4) x 4	Ø6.35 (1/4) x 5
	Gas		mm(inch) x No.	Ø9.52 (3/8) x 4	Ø9.52 (3/8) x 5

Notes :
1. Capacities are based on the following conditions:
   Cooling : - Indoor Temperature 27°C (80.6°F) DB / 19°C (66.2°F) WB - Outdoor Temperature 35°C (95°F) DB / 24°C (75.2°F) WB
   Heating : - Indoor Temperature 20°C (68°F) DB / 15°C (59°F) WB - Outdoor Temperature 7°C (44.6°F) DB / 6°C (42.8°F) WB
   Piping Length - Interconnecting Piping Length 7.5m - Level Difference of Zero.
2. * : See page "Combination Table".
3. Due to our policy of innovation some specifications may be changed without notification.
4. At least two indoor units should be connected
5. Minimum combination ratio should be more than 40%.
6. This product contains fluorinated greenhouse gases (R32)

WALL MOUNTED UNITS

KBTU/H			5	7	9	12	15	18	24
KW			1.5	2.1	2.6	3.5	4.2	5.3	7.0
Wall Mounted Unit	Gallery		-	-	● MA09R.NF1	● MA12R.NF1	-	-	-
	Mirror		-	● AM07BP.NSJ	○● AC09BQ.NSJ	○● AC12BQ.NSJ	-	○● AC18BQ.NSK	○● AC24BQ.NSK

ARTCOOL Gallery

				MA09R.NF1	MA12R.NF1
Capacity	Cooling / Heating	Nom	kW	2.6 / 2.9	3.5 / 3.9
Power Input			W x No.	40 x 1	40 x 1
Running Current			A	0.1	0.1
Power Supply			V, Ø, Hz	220-240, 1, 50	220-240, 1, 50
Air Flow Rate		H / M / L	m³/min	7.7 / 5.9 / 4.4	8.9 / 7.3 / 5.6
Sound Pressure	Cooling	H / M / L	dB(A)	38 / 32 / 27	44 / 38 / 32
Sound Power	Cooling		dB(A)	52	54
Dehumidification Rate			l/h	1.2	1.4
Dimensions	Body	W x H x D	mm	600 x 600 x 145	600 x 600 x 145
Net Weight	Body		kg	15.0	15.0
Piping Connections	Liquid		mm(inch)	Ø 6.35 (1/4)	Ø 6.35 (1/4)
	Gas		mm(inch)	Ø 9.52 (3/8)	Ø 9.52 (3/8)

ARTCOOL Mirror

				AM07BP.NSJ	AC09BQ.NSJ	AC12BQ.NSJ	AC18BQ.NSK	AC24BQ.NSK
Capacity	Cooling / Heating	Nom	kW	2.1 / 2.3	2.5 / 3.2	3.5 / 3.8	5.0 / 5.8	6.6 / 7.5
Power Input		Nom	W	17	18	19	39	45
Running Current		Nom	A	0.14	0.16	0.17	0.28	0.33
Power Supply			V, Ø, Hz	220-240, 1, 50	220-240, 1, 50	220-240, 1, 50	220-240, 1, 50	220-240, 1, 50
Air Flow Rate		H / M / L	m³/min	8.6 / 7.2 / 5.6	9.2 / 7.4 / 5.6	9.6 / 8.1 / 5.6	14.2 / 11.3 / 9.9	15.2 / 12.7 / 10.2
Sound Pressure	Cooling	H / M / L	dB(A)	35 / 32 / 27	36 / 33 / 27	40 / 35 / 27	44 / 38 / 35	46 / 41 / 36
Sound Power	Cooling		dB(A)	57	57	57	59	65
Dehumidification Rate			l/h	0.9	1.1	1.2	1.9	2.6
Dimension		W x H x D	mm	837 x 308 x 192	837 x 308 x 192	837 x 308 x 192	998 x 345 x 212	998 x 345 x 212
Net weight			kg	9.1	9.9	9.9	13.2	11.6
Piping Connection	Liquid		mm(inch)	Ø 6.35 (1/4)	Ø 6.35 (1/4)	Ø 6.35 (1/4)	Ø 6.35 (1/4)	Ø 6.35 (1/4)
	Gas		mm(inch)	Ø 9.52 (3/8)	Ø 9.52 (3/8)	Ø 9.52 (3/8)	Ø 12.7 (1/2)	Ø 12.7 (1/2)

* This product contains Fluorinated greenhouse gases (R32).
※ For our policy of continuous product improvement, specification, design and features are subject to change without prior notice.

R32 MULTI SPLIT

WALL MOUNTED UNITS

KBTU/H			5	7	9	12	15	18	24
KW			1.5	2.1	2.6	3.5	4.2	5.3	7.0
Wall Mounted Unit	Silver		-		○● AC09SQ.NSJ	○● AC12SQ.NSJ	-	○● AC18SQ.NSK	
	Air - Purifying	NEW	-	-	○● AP09RT.NSJ	○● AP12RT.NSJ	-	-	-

ARTCOOL Silver

				AC09SQ.NSJ	AC12SQ.NSJ	AC18SQ.NSK
Capacity	Cooling / Heating	Nom	kW	2.5 / 3.2	3.5 / 3.8	5.0 / 5.8
Power Input		Nom	W	18	19	39
Running Current		Nom	A	0.16	0.17	0.28
Power Supply			V, Ø, Hz	220-240, 1, 50	220-240, 1, 50	220-240, 1, 50
Air Flow Rate		H / M / L	m³/min	9.2 / 7.4 / 5.6	9.6 / 8.1 / 5.6	14.2 / 11.3 / 9.9
Sound Pressure	Cooling	H / M / L	dB(A)	36 / 33 / 27	40 / 35 / 27	44 / 38 / 35
Sound Power	Cooling		dB(A)	57	57	59
Dehumidification Rate			l/h	1.1	1.2	1.9
Dimension		W x H x D	mm	837 x 308 x 192	837 x 308 x 192	998 x 345 x 212
Net weight			kg	9.9	9.9	13.2
Piping Connection	Liquid		mm(inch)	Ø 6.35 (1/4)	Ø 6.35 (1/4)	Ø 6.35 (1/4)
	Gas		mm(inch)	Ø 9.52 (3/8)	Ø 9.52 (3/8)	Ø 12.7 (1/2)

Air - Purifying

				AP09RT.NSJ	AP12RT.NSJ
Capacity	Cooling / Heating	Nom	kW	2.5/ 3.3	3.5/ 4.0
Power Input			W x No.	21	22
Running Current			A	0.18	0.19
Power Supply			V, Ø, Hz	220-240, 1, 50	220-240, 1, 50
Air Flow Rate		H / M / L	m³/min	10 / 6.6 / 4.2	10 / 6.6 / 4.2
Sound Pressure	Cooling	H / M / L	dB(A)	42 / 35 / 27	42 / 35 / 27
Sound Power	Cooling		dB(A)	59	59
Dehumidification Rate			l/h	0.9	0.9
Dimensions	Body	W x H x D	mm	857 x 348 x 189	857 x 348 x 189
Net Weight	Body		kg	9.5	9.5
Piping Connections	Liquid		mm(inch)	Ø 6.35 (1/4)	Ø 6.35 (1/4)
	Gas		mm(inch)	Ø 9.52 (3/8)	Ø 9.52 (3/8)

* This product contains Fluorinated greenhouse gases (R32).
※ For our policy of continuous product improvement, specification, design and features are subject to change without prior notice.

WALL MOUNTED UNITS

KBTU/H			5	7	9	12	15	18	24
KW			1.5	2.1	2.6	3.5	4.2	5.3	7.0
Wall Mounted Unit	Deluxe		-	● DM07RP.NSJ	○● DC09RQ.NSJ	○● DC12RQ.NSJ	-	○● DC18RQ.NSK	○● DC24RQ.NSK

DELUXE

				DM07RP.NSJ	DC09RQ.NSJ	DC12RQ.NSJ	DC18RQ.NSK	DC24RQ.NSK
Capacity	Cooling / Heating	Nom	kW	2.1 / 2.3	2.5 / 3.2	3.5 / 4.0	5.0 / 5.8	6.6 / 7.5
Power Input		Nom	W	17	18	19	39	45
Running Current		Nom	A	0.15	0.16	0.17	0.28	0.33
Power Supply			V, Ø, Hz	220-240, 1, 50	220-240, 1, 50	220-240, 1, 50	220-240, 1, 50	220-240, 1, 50
Air Flow Rate		H / M / L	m³/min	7.5 / 6.1 / 4.9	7.7 / 6.4 / 5.0	8.1 / 6.7 / 5.3	14.2 / 11.3 / 9.9	15.2 / 12.7 / 10.2
Sound Pressure	Cooling	H / M / L	dB(A)	35 / 31 / 26	36 / 32 / 27	38 / 34 / 29	44 / 38 / 34	47 / 41 / 36
Sound Power	Cooling		dB(A)	56	56	56	60	64
Dehumidification Rate			l/h	0.9	1.1	1.2	1.9	2.6
Dimension		W x H x D	mm	837 x 308 x 189	837 x 308 x 189	837 x 308 x 189	998 x 345 x 210	998 x 345 x 210
Net weight			kg	8.3	8.3	8.3	12.0	12.0
Piping Connection	Liquid		mm(inch)	Ø 6.35 (1/4)	Ø 6.35 (1/4)	Ø 6.35 (1/4)	Ø 6.35 (1/4)	Ø 6.35 (1/4)
	Gas		mm(inch)	Ø 9.52 (3/8)	Ø 9.52 (3/8)	Ø 9.52 (3/8)	Ø 12.7 (1/2)	Ø 12.7 (1/2)

R32 MULTI SPLIT

WALL MOUNTED UNITS

KBTU/H			5	7	9	12	15	18	24
KW			1.5	2.1	2.6	3.5	4.2	5.3	7.0
Wall Mounted Unit	Standard Plus		● PM05SP.NSJ	● PM07SP.NSJ	○● PC09SQ.NSJ	○● PC12SQ.NSJ	● PM15SP.NSJ	○● PC18SQ.NSK	○● PC24SQ.NSK
			● MJ05PC.NSJ	● MJ07PC.NSJ	● MJ09PC.NSJ	● MJ12PC.NSJ	● MJ15PC.NSJ	● MJ18PC.NSK	● MJ24PC.NSK

STANDARD PLUS

				PM05SP.NSJ	PM07SP.NSJ	PC09SQ.NSJ	PC12SQ.NSJ	PM15SP.NSJ	PC18SQ.NSK	PC24SQ.NSK
Capacity	Cooling / Heating	Nom	kW	1.5 / 1.6	2.1 / 2.3	2.5 / 3.2	3.5 / 3.8	4.2 / 5.4	5.0 / 5.8	6.6 / 7.5
Power Input		Nom	W	16	17	18	19	21	39	45
Running Current		Nom	A	0.13	0.14	0.16	0.17	0.18	0.28	0.33
Power Supply			V, Ø, Hz	220-240, 1, 50	220-240, 1, 50	220-240, 1, 50	220-240, 1, 50	220-240, 1, 50	220-240, 1, 50	220-240, 1, 50
Air Flow Rate		H / M / L	m³/min	8.3 / 6.7 / 5.6	8.6 / 7.2 / 5.6	9.2 / 7.4 / 5.6	9.6 / 8.1 / 5.6	100/8.5/6.1	14.2/11.3/9.9	15.2/12.7/10.2
Sound Pressure		H / M / L	dB(A)	34 / 31 / 27	35 / 32 / 27	36 / 33 / 27	40 / 35 / 27	41 / 36 / 29	44 / 38 / 35	46 / 41 / 36
Sound Power			dB(A)	57	57	57	57	57	59	65
Dehumidification Rate			l/h	0.9	0.9	1.1	1.2	1.2	1.9	2.6
Dimension		W x H x D	mm	837 x 308 x 189	837 x 308 x 189	837 x 308 x 189	837 x 308 x 189	837 x 308 x 189	998 x 345 x 210	998 x 345 x 210
Net weight			kg	7.4	7.4	8.7	8.7	8.7	12.0	12.8
Piping Connection	Liquid		mm(inch)	Ø 6.35 (1/4)	Ø 6.35 (1/4)	Ø 6.35 (1/4)	Ø 6.35 (1/4)	Ø 6.35 (1/4)	Ø 6.35 (1/4)	Ø 6.35 (1/4)
	Gas		mm(inch)	Ø 9.52 (3/8)	Ø 9.52 (3/8)	Ø 9.52 (3/8)	Ø 9.52 (3/8)	Ø 9.52 (3/8)	Ø 12.7 (1/2)	Ø 12.7 (1/2)

				MJ05PC.NSJ	MJ07PC.NSJ	MJ09PC.NSJ	MJ12PC.NSJ	MJ15PC.NSJ	MJ18PC.NSK	MJ24PC.NSK
Capacity	Cooling / Heating	Nom	kW	1.5 / 1.6	2.1 / 2.3	2.5 / 3.2	3.5 / 3.8	4.2 / 5.4	5.0 / 5.8	6.6 / 7.5
Power Input		Nom	W	16	17	18	19	21	39	45
Running Current		Nom	A	0.13	0.14	0.16	0.17	0.18	0.28	0.33
Power Supply			V, Ø, Hz	220-240, 1, 50	220-240, 1, 50	220-240, 1, 50	220-240, 1, 50	220-240, 1, 50	220-240, 1, 50	220-240, 1, 50
Air Flow Rate		H / M / L	m³/min	8.3 / 6.7 / 5.6	8.6 / 7.2 / 5.6	9.2 / 7.4 / 5.6	9.6 / 8.1 / 5.6	10.0 / 8.5 / 6.1	14.2 / 11.3 / 9.9	15.2 / 12.7 / 10.2
Sound Pressure		H / M / L	dB(A)	34 / 31 / 27	35 / 32 / 27	36 / 33 / 27	40 / 35 / 27	41 / 36 / 29	44 / 38 / 35	46 / 41 / 36
Sound Power			dB(A)	57	57	57	57	57	59	65
Dehumidification Rate			l/h	0.9	0.9	1.1	1.2	1.2	1.9	2.6
Dimension		W x H x D	mm	837 x 308 x 189	837 x 308 x 189	837 x 308 x 189	837 x 308 x 189	837 x 308 x 189	998 x 345 x 210	998 x 345 x 210
Net weight			kg	8.7	8.7	8.7	8.7	8.7	12.0	12.8
Piping Connection	Liquid		mm(inch)	Ø 6.35 (1/4)	Ø 6.35 (1/4)	Ø 6.35 (1/4)	Ø 6.35 (1/4)	Ø 6.35 (1/4)	Ø 6.35 (1/4)	Ø 6.35 (1/4)
	Gas		mm(inch)	Ø 9.52 (3/8)	Ø 9.52 (3/8)	Ø 9.52 (3/8)	Ø 9.52 (3/8)	Ø 9.52 (3/8)	Ø 12.7 (1/2)	Ø 12.7 (1/2)

* This product contains Fluorinated greenhouse gases (R32).
※ For our policy of continuous product improvement, specification, design and features are subject to change without prior notice.

WALL MOUNTED UNITS

KBTU/H			5	7	9	12	15	18	24
KW			1.5	2.1	2.6	3.5	4.2	5.3	7.0
Wall Mounted Unit	Standard2	NEW	-	● MS07ET.NSJ	○● S09ET.NSJ	○● S12ET.NSJ	-	○● S18ET.NSK	○● S24ET.NSK

Standard2

				MS07ET.NSJ	S09ET.NSJ	S12ET.NSJ	S18ET.NSJ	S24ET.NSJ
Capacity	Cooling / Heating	Nom	kW	2.1 / 2.3	2.5/ 3.2	3.5/ 3.8	5.0 / 5.8	6.6 / 7.5
Power Input		Nom	W	17	18	19	39	45
Running Current		Nom	A	0.14	0.16	0.17	0.28	0.33
Power Supply			V, Ø, Hz	220-240, 1, 50	220-240, 1, 50	220-240, 1, 50	220-240, 1, 50	220-240, 1, 50
Air Flow Rate		H / M / L	m³/min	8.6 / 7.2 / 5.6	9.2 / 7.4 / 5.6	9.6 / 8.1 / 5.6	14.2 / 11.3 / 9.9	15.2 / 12.7 / 10.2
Sound Pressure	Cooling	H / M / L	dB(A)	35 / 32 / 27	36 / 33 / 27	40 / 35 / 27	44 / 38 / 35	46 / 41 / 36
Sound Power	Cooling		dB(A)	57	57	57	59	65
Dehumidification Rate			l/h	0.9	0.9	0.9	0.9	0.9
Dimension		W x H x D	mm	837 x 308 x 189	837 x 308 x 189	837 x 308 x 189	998 x 345 x 210	998 x 345 x 210
Net weight			kg	8.7	8.7	8.7	11.9	12.7
Piping Connection	Liquid		mm(inch)	Ø 6.35 (1/4)	Ø 6.35 (1/4)	Ø 6.35 (1/4)	Ø 6.35 (1/4)	Ø 6.35 (1/4)
	Gas		mm(inch)	Ø 9.52 (3/8)	Ø 9.52 (3/8)	Ø 9.52 (3/8)	Ø 12.7 (1/2)	Ø 12.7 (1/2)

CEILING MOUNTED CASSETTE

KBTU/H			5	7	9	12	15	18	24
KW			1.5	2.1	2.6	3.5	4.2	5.3	7.0
Ceiling Mounted Cassette	1 Way Cassette		-	-	● MT09R.NU1	● MT11R.NU1	-	-	-
	4 Way Cassette	NEW	● MT06R.NR0	● MT08R.NR0	●○ CT09F.NR0	●○ CT12F.NR0	-	●○ CT18F.NQ0	●○ CT24F.NB0

* Dual vane is applied to 24k (4Way cassette)

1Way Cassette

INDOOR				MT09R.NU1	MT11R.NU1
Capacity	Cooling / Heating	Nom	kW	2.6 / 2.9	3.5 / 3.9
Power Input		Nom	W	20	20
Running Current		Nom	A	0.2	0.2
Power Supply			V, Ø, Hz	220-240, 1, 50	220-240, 1, 50
Air Flow Rate		H / M / L	m³/min	7.5 / 7.3 / 6.8	8.1 / 7.4 / 7.0
Sound Pressure	Cooling	H / M / L	dB(A)	36 / 34 / 32	37 / 36 / 33
Sound Power	Cooling	Max	dB(A)	54	57
Dehumidification Rate			l/h	1.1	1.2
Dimensions	Body	W x H x D	mm	860 × 132 × 450	860 × 132 × 450
Net Weight	Body		kg	13.5	13.5
Piping Connection	Liquid		mm(inch)	Ø6.35 (1/4)	Ø6.35 (1/4)
	Gas		mm(inch)	Ø9.52 (3/8)	Ø9.52 (3/8)
Decoration Panel	Model			PT-UUC1	PT-UUC1
	Color			Morning Fog (RAL120-4)	Morning Fog (RAL120-4)
	Dimensions	W x H x D	mm	1,100 × 34 × 500	1,100 × 34 × 500
	Weight		kg	4.4	4.4

4Way Cassette

				MT06R.NR0	MT08R.NR0	CT09F.NR0	CT12F.NR0	CT18F.NQ0	CT24F.NB0
Capacity	Cooling / Heating	Nom	kW	1.5 / 1.6	2.1 / 2.3	2.6 / 2.9	3.5 / 3.9	5.3 / 5.8	6.7 / 7.5
Power Input		Nom	W	20	20	20	20	40	60
Running Current		Nom	A	0.40	0.40	0.40	0.40	0.40	0.60
Power Supply			V, Ø, Hz	220-240, 1, 50	220-240, 1, 50	220-240, 1, 50	220-240, 1, 50	220-240, 1, 50	220-240, 1, 50
Air Flow Rate		H / M / L	m³/min	7.5 / 6.0 / 5.0	7.5 / 6.0 / 5.0	8.5 / 7.0 / 6.0	9.5 / 8.0 / 7.0	13.0 / 12.0 / 11.0	17.0 / 15.0 / 13.0
Sound Pressure		H / M / L	dB(A)	31 / 27 / 24	31 / 27 / 24	36 / 33 / 30	38 / 35 / 32	41 / 39 / 36	38 / 36 / 34
Sound Power			dB(A)	48	48	52	52	57	57
Dehumidification Rate			l/h	-	-	0.9	1.4	2.0	2.7
Dimension		W x H x D	mm	570 x 214 x 570	570 x 214 x 570	570 x 214 x 570	570 x 214 x 570	570 x 256 x 570	840 x 204 x 840
Net weight			kg	14.0	14.0	14.0	14.0	14.3	20.5
Piping Connection	Liquid		mm(inch)	Ø6.35 (1/4)	Ø6.35 (1/4)	Ø6.35 (1/4)	Ø6.35 (1/4)	Ø6.35 (1/4)	Ø6.35 (1/4)
	Gas		mm(inch)	Ø9.52 (3/8)	Ø9.52 (3/8)	Ø9.52 (3/8)	Ø9.52 (3/8)	Ø12.7 (1/2)	Ø12.7 (1/2)
Decoration Panel	Model			PT-QCHW0	PT-QCHW0	PT-QCHW0	PT-QCHW0	PT-QCHW0	PT-MCHW0
	Color			Morning Fog (RAL 120-4)					
	Dimensions	W x H x D	mm	620 x 20 x 620	620 x 20 x 620	620 x 20 x 620	620 x 20 x 620	620 x 20 x 620	950 x 35 x 950
	Weight		kg	3.0	3.0	3.0	3.0	3.0	6.3

* This product contains Fluorinated greenhouse gases (R32).
※ For our policy of continuous product improvement, specification, design and features are subject to change without prior notice.

R410A
MULTI SPLIT

OUTDOOR UNITS

R410A

MU5M40

(Unit : mm)

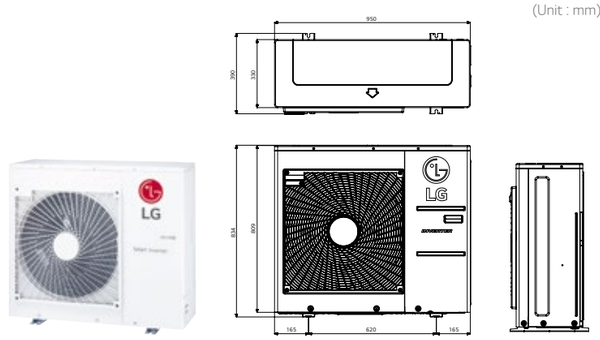

OUTDOOR				MU5M40.U44
Compressor	Type			Scroll
Capacity*	Cooling	Min / Nom / Max	kW	1.3 / 11.2 / 14.7
	Heating	Min / Nom / Max	kW	1.5 / 12.5 / 16.0
Low Temperature Capacity	Heating -7℃	Max	kW	11.0
Power Input*	Cooling	Min / Nom / Max	kW	0.4 / 3.3 / 5.5
	Heating	Min / Nom / Max	kW	0.4 / 3.8 / 5.6
Running Current*	Cooling	Min / Nom / Max	A	1.8 / 14.9 / 24.9
	Heating	Min / Nom / Max	A	1.9 / 17.0 / 25.4
EER				3.40
COP				3.33
SEER				7.10
SCOP				4.00
Pdesign (@-10℃)			kW	8.90
Season Energy Label	Cooling / Heating (A+++ to D Scale)			A++ / A+
Annual Energy Consumption	Cooling / Heating		kWh	552 / 3,114
Airflow Rate		Nom	m³/min	80
Sound Pressure Level	Cooling	Nom	dB(A)	53
	Heating	Nom	dB(A)	55
Sound Power Level	Cooling	Max	dB(A)	67
Dimensions	W x H x D		mm	950 × 834 × 330
Net Weight			kg	73
Refrigerant	Type			R410A
	Charge		kg	3.4
	Additional Charge		g/m	20
	GWP			2087.5
	t-CO_2 eq			7.098
Operation Range (Outdoor)	Cooling	Min / Max	℃ DB	-10 ~ 48
	Heating	Min / Max	℃ WB	-25 ~ 18
Power Supply			V, Ø, Hz	220-240, 1, 50
Power Supply Cable			No. x mm²	3C × 3.5
Transmission Cable			No. x mm²	4C × 0.75
Circuit Breaker			A	40
Piping Length Total			m	85
Piping Length per Branch		Max	m	25
Piping Elevation Difference	IDU - ODU	Max	m	15
	IDU - IDU	Max	m	7.5
Piping Connection	Liquid		mm(inch) x No.	Ø 6.35 (1/4) × 5
	Gas		mm(inch) x No.	Ø 9.52 (3/8) × 5

※ For our policy of continuous product improvement, specification, design and features are subject to change without prior notice.
※ This Product is avable from Apr.2020

Note : 1. Capacities are based on the following conditions:
Cooling : - Indoor Temperature 27°C (80.6°F) DB / 19°C (66.2°F) WB - Outdoor Temperature 35°C (95°F) DB / 24°C (75.2°F) WB
Heating : - Indoor Temperature 20°C (68°F) DB / 15°C (59°F) WB - Outdoor Temperature 7°C (44.6°F) DB / 6°C (42.8°F) WB
Piping Length - Interconnecting Piping Length 7.5m - Level Difference of Zero.
2. * : See page "Combination Table".
3. Due to our policy of innovation some specifications may be changed without notification.
4. At least two indoor units should be connected.
5. Minimum combination capacity rate should be more than 40%.
6. This product contains fluorinated greenhouse gases (R410A)

OUTDOOR UNITS

R410A

FM40AH
FM48AH
FM56AH

(Unit : mm)

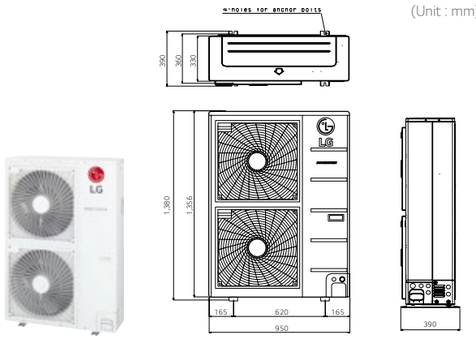

OUTDOOR				FM40AH.U34	FM48AH.U34	FM56AH.U34
Compressor	Type		-	Scroll	Scroll	Scroll
Capacity*	Cooling	Min / Nom / Max	kW	2.8 / 12.3 / 15.4	3.3 / 14.1 / 17.0	4.0 / 15.5 / 18.5
	Heating	Min / Nom / Max	kW	3.1 / 13.5 / 16.2	3.7 / 16.0 / 17.3	4.5 / 17.4 / 18.8
Low Temperature Capacity	Heating	Max	kW	12.5	14.5	15.5
Power Input*	Cooling	Min / Nom / Max	kW	0.82 / 2.42 / 4.90	0.96 / 3.12 / 5.30	1.18 / 3.87 / 5.60
	Heating	Min / Nom / Max	kW	0.89 / 2.87 / 5.10	1.06 / 3.76 / 5.40	1.29 / 4.34 / 5.80
Running Current*	Cooling	Min / Nom / Max	A	3.7 / 11.0 / 22.2	4.4 / 14.1 / 24.0	5.3 / 17.5 / 25.4
	Heating	Min / Nom / Max	A	4.0 / 13.0 / 23.1	4.8 / 17.0 / 24.5	5.9 / 19.7 / 26.3
EER				5.08	4.51	4.01
COP				4.70	4.25	4.01
SEER				7.40	7.20	6.90
SCOP				4.20	4.20	4.20
Pdesign(@-10℃)			kW	8.6	9.5	9.5
Seasonal Energy Label (A++ to E Scale)	Cooling / Heating		-	- / -	- / -	- / -
Annual Energy Consumption		Cooling / Heating	kWh	981 / 2,867	1,167 / 3,167	1,348 / 3,167
Air Flow Rate		Nom	m^3/min x No.	110	110	110
Sound Pressure Level	Cooling	Nom	dB(A)	51	53	53
	Heating	Nom	dB(A)	53	55	55
Sound Power Level	Cooling	Max	dB(A)	69	71	73
	Heating	Max	dB(A)	70	72	74
Dimensions		W x H x D	mm	950 × 1,380 × 330	950 × 1,380 × 330	950 × 1,380 × 330
Net Weight			kg	87	87	87
Refrigerant	Type		-	R410A	R410A	R410A
	Charge		kg	4,200	4,200	4,200
	Additional Charging Volume		g/m	20	20	20
	GWP (Global Warming Potential)		-	2,087.5	2,087.5	2,087.5
	t-CO2 eq.		-	8.768	8.768	8.768
Operation Range (Outdoor)	Cooling	Min. ~ Max.	˚C DB	-10 ~ 48	-10 ~ 48	-10 ~ 48
	Heating	Min. ~ Max.	˚C WB	-25 ~ 18	-25 ~ 18	-25 ~ 18
Power Supply			V, Ø, Hz	1 / 220-240 / 50	1 / 220-240 / 50	1 / 220-240 / 50
Power Supply Cable			No. x mm^2	3C × 4.0	3C × 4.0	3C × 4.0
Transmission Cable	ODU~BD		No. x mm^2	4C × 1.25	4C × 1.25	4C × 1.25
	BD-IDU		No. x mm^2	4C × 0.75	4C × 0.75	4C × 0.75
Circuit Breaker			A	40	40	40
Max Piping Length	Total Piping(Main+Total Branch)		m	125	135	145
	Main Piping		m	55	55	55
	Total Branch Piping		m	70	80	90
	Each Branch Piping		m	15	15	15
Piping Elevation Difference	IDU~ODU	Max.	m	30	30	30
	IDU~IDU	Max.	m	15	15	15
Piping Connections	Liquid		mm(inch) x No.	Ø 9.52 × 1	Ø 9.52 × 1	Ø 9.52 × 1
	Gas		mm(inch) x No.	Ø 19.05 ×1	Ø 19.05 ×1	Ø 19.05 ×1

※ For our policy of continuous product improvement, specification, design and features are subject to change without prior notice.
※ This Product is avable from Apr.2020
Note : 1. Capacities are based on the following conditions:
Cooling : - Indoor Temperature 27°C (80.6°F) DB / 19°C (66.2°F) WB - Outdoor Temperature 35°C (95°F) DB / 24°C (75.2°F) WB
Heating : - Indoor Temperature 20°C (68°F) DB / 15°C (59°F) WB - Outdoor Temperature 7°C (44.6°F) DB / 6°C (42.8°F) WB
Piping Length - Interconnecting Piping Length 7.5m - Level Difference of Zero.
2. * : See page "Combination Table".
3. Due to our policy of innovation some specifications may be changed without notification.
4. At least two indoor units should be connected.
5. Minimum combination capacity rate should be more than 40%.
6. This product contains fluorinated greenhouse gases (R410A)

OUTDOOR UNITS

R410A

FM41AH
FM49AH
FM57AH

(Unit : mm)

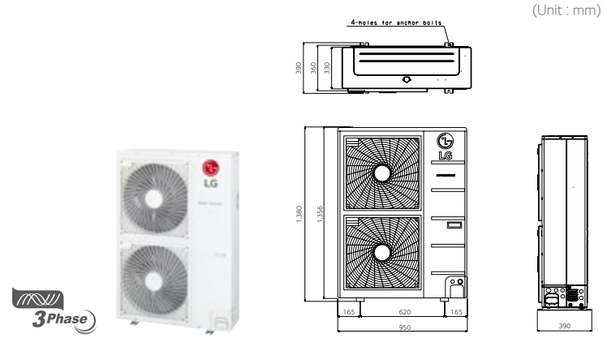

OUTDOOR				FM41AH.U34	FM49AH.U34	FM57AH.U34
Compressor	Type		-	Scroll	Scroll	Scroll
Capacity*	Cooling	Min / Nom / Max	kW	2.8 / 12.3 / 15.4	3.3 / 14.1 / 17.0	4.0 / 15.5 / 18.5
	Heating	Min / Nom / Max	kW	3.1 / 13.5 / 16.2	3.7 / 16.0 / 17.3	4.5 / 17.4 / 18.8
Low Temperature Capacity	Heating	Max	kW	12.5	14.5	15.5
Power Input*	Cooling	Min / Nom / Max	kW	0.82 / 2.42 / 4.90	0.96 / 3.12 / 5.30	1.18 / 3.87 / 5.60
	Heating	Min / Nom / Max	kW	0.89 / 2.87 / 5.10	1.06 / 3.76 / 5.40	1.29 / 4.34 / 5.80
Running Current*	Cooling	Min / Nom / Max	A	1.2 / 3.6 / 7.4	1.4 / 4.7 / 8.0	1.8 / 5.8 / 8.4
	Heating	Min / Nom / Max	A	1.3 / 4.3 / 7.7	1.6 / 5.7 / 8.1	1.9 / 6.5 / 8.7
EER				5.08	4.51	4.01
COP				4.70	4.25	4.01
SEER				7.40	7.20	6.90
SCOP				4.20	4.20	4.20
Pdesign(@-10℃)			kW	8.6	9.5	9.5
Seasonal Energy Label (A++ to E Scale)	Cooling / Heating		-	- / -	- / -	- / -
Annual Energy Consumption		Cooling / Heating	kWh	981 / 2,867	1,167 / 3,167	1,348 / 3,167
Air Flow Rate		Nom	m^3/min x No.	110	110	110
Sound Pressure Level	Cooling	Nom	dB(A)	51	53	53
	Heating	Nom	dB(A)	53	55	55
Sound Power Level	Cooling	Max	dB(A)	69	71	73
	Heating	Max	dB(A)	70	72	74
Dimensions		W x H x D	mm	950 × 1,380 × 330	950 × 1,380 × 330	950 × 1,380 × 330
Net Weight			kg	87	87	87
Refrigerant	Type		-	R410A	R410A	R410A
	Charge		kg	4,200	4,200	4,200
	Additional Charging Volume		g/m	20	20	20
	GWP (Global Warming Potential)		-	2,087.5	2,087.5	2,087.5
	t-CO2 eq.		-	8.768	8.768	8.768
Operation Range (Outdoor)	Cooling	Min. ~ Max.	˚C DB	-10 ~ 48	-10 ~ 48	-10 ~ 48
	Heating	Min. ~ Max.	˚C WB	-25 ~ 18	-25 ~ 18	-25 ~ 18
Power Supply			V, Ø, Hz	3 / 380-415 / 50	3 / 380-415 / 50	3 / 380-415 / 50
Power Supply Cable			No. x mm^2	5C × 2.5	5C × 2.5	5C × 2.5
Transmission Cable	ODU~BD		No. x mm^2	4C × 1.25	4C × 1.25	4C × 1.25
	BD-IDU		No. x mm^2	4C × 0.75	4C × 0.75	4C × 0.75
Circuit Breaker			A	20	20	20
Max Piping Length	Total Piping(Main+Total Branch)		m	125	135	145
	Main Piping		m	55	55	55
	Total Branch Piping		m	70	80	90
	Each Branch Piping		m	15	15	15
Piping Elevation Difference	IDU~ODU	Max.	m	30	30	30
	IDU~IDU	Max.	m	15	15	15
Piping Connections	Liquid		mm(inch) x No.	Ø 9.52 × 1	Ø 9.52 × 1	Ø 9.52 × 1
	Gas		mm(inch) x No.	Ø 19.05 ×1	Ø 19.05 ×1	Ø 19.05 ×1

※ For our policy of continuous product improvement, specification, design and features are subject to change without prior notice.
※ This Product is avable from Apr.2020
Note : 1. Capacities are based on the following conditions:
Cooling : - Indoor Temperature 27°C (80.6°F) DB / 19°C (66.2°F) WB - Outdoor Temperature 35°C (95°F) DB / 24°C (75.2°F) WB
Heating : - Indoor Temperature 20°C (68°F) DB / 15°C (59°F) WB - Outdoor Temperature 7°C (44.6°F) DB / 6°C (42.8°F) WB
Piping Length - Interconnecting Piping Length 7.5m - Level Difference of Zero.
2. * : See page "Combination Table".
3. Due to our policy of innovation some specifications may be changed without notification.
4. At least two indoor units should be connected.
5. Minimum combination capacity rate should be more than 40%.
6. This product contains fluorinated greenhouse gases (R410A)

CEILING & FLOOR CONVERTIBLE

Flexible Installation

The ceiling and floor models can be installed either on the ceiling or on the floor.
This saves space when installed in the shops or offices.

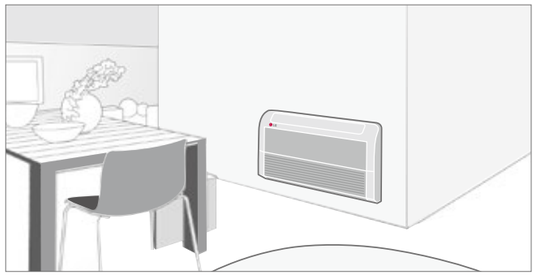

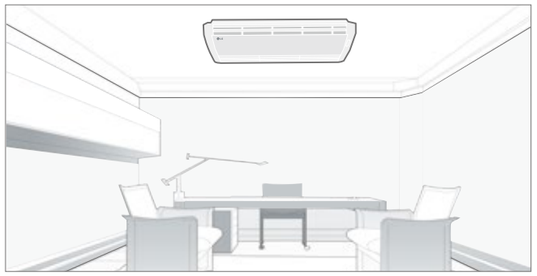

* Ceiling & Floor : CV09 NE2 / CV12 NE2

Air Flow Direction Control

Vertical air flow direction can be adjusted using remote controller, and horizontal airflow direction can be adjusted manually.

Horizontal

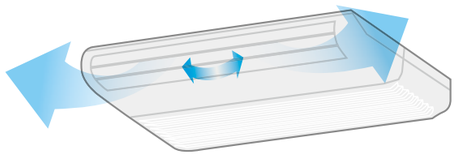

air flow

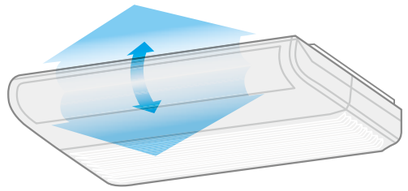

Cooling

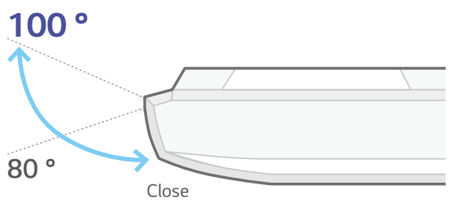

Heating

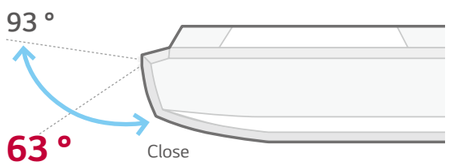

R410A MULTI SPLIT

CEILING & FLOOR CONVERTIBLE

CAPACITY (KW)		2.6	3.5	5.3	7.0
Ceiling & Floor Convertible unit		CV09.NE2	CV12.NE2	-	-

Ceiling & Floor Convertible unit

INDOOR				CV09.NE2	CV12.NE2
Capacity	Cooling / Heating	Nom	kW	2.6 / 2.9	3.5 / 3.9
Power Input		Nom	W	30	40
Running Current		Nom	A	0.4	0.4
Power Supply			V, Ø, Hz	220-240, 1, 50	220-240, 1, 50
Air Flow Rate		H / M / L	m³/min	7.6 / 6.9 / 6.2	9.2 / 7.6 / 6.6
Sound Pressure	Cooling	H / M / L	dB(A)	38 / 35 / 31	40 / 36 / 32
Sound Power	Cooling	Max	dB(A)	52	56
Dehumidification Rate			l/h	1.2	1.2
Dimensions	Body	W x H x D	mm	900 × 490 x 200	900 × 490 x 200
Net Weight	Body		kg	13.7	13.7
Piping Connection	Liquid		mm(inch)	Ø6.35 (1/4)	Ø6.35 (1/4)
	Gas		mm(inch)	Ø9.52 (3/8)	Ø9.52 (3/8)

※ For our policy of continuous product improvement, specification, design and features are subject to change without prior notice.

Note : 1. Capacities are based on the following conditions :
Cooling : - Indoor Temperature 27°C (80.6°F) DB / 19°C (66.2°F) WB - Outdoor Temperature 35°C (95°F) DB / 24°C (75.2°F) WB
Heating : - Indoor Temperature 20°C (68°F) DB / 15°C (59°F) WB - Outdoor Temperature 7°C (44.6°F) DB / 6°C (42.8°F) WB
Piping Length - Interconnecting Piping Length 7.5m - Level Difference of Zero
2. Definition of Power Input Nominal conditions – Performance tested under EN14511
3. Due to our policy of innovation some specifications may be changed without notification
4. This product contains fluorinated greenhouse gases (R410A)

CONSOLE

Optimised Air Flow for Cooling & Heating

During cooling operation, the vane adjusts upwards to direct air flow toward the ceiling. During heating operation, the van directs the air flow toward the floor to balance out the room temperature. A wireless controller is included with the indoor console unit.

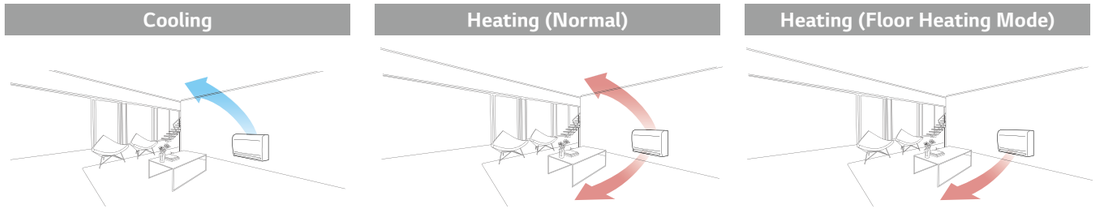

Quick Floor Heating

Console air conditioners offer a fast and powerful performance. Using the floor heating mode, console air conditioners provide faster floor heating nd help to reach the desired temperature quickly.

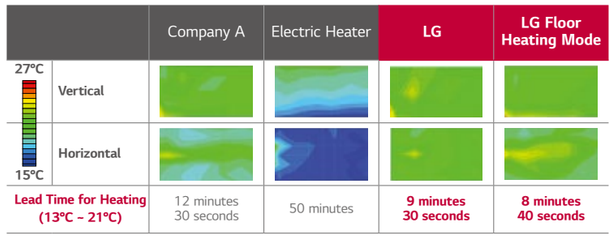

(Test Condition :Target Temp 23°C, Indoor Room : 13°C~ , Outdoor Room : 7°C)

5-Step Vane Control

There are 5 different stages to control air flow direction.

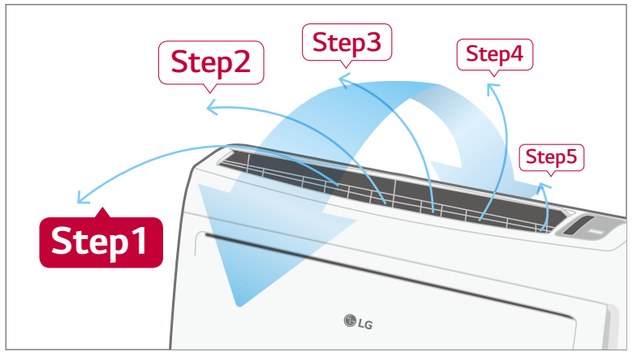

CONSOLE

CAPACITY (KW)		2.6	3.5	5.3
Console		CQ09.NA0	CQ12.NA0	CQ18.NA0

Console

INDOOR				CQ09.NA0
Capacity	Cooling / Heating	Nom	kW	2.6 / 2.9
Power Input		Nom	W	20
Running Current		Nom	A	0.6
Power Supply			V, Ø, Hz	220-240, 1, 50
Air Flow Rate		H / M / L	m³/min	8.5 / 6.7 / 5.0
Sound Pressure	Cooling	H / M / L	dB(A)	38 / 32 / 27
Sound Power	Cooling	Max	dB(A)	53
Dehumidification Rate			l/h	1.2
Dimensions	Body	W x H x D	mm	700 × 600 × 210
Net Weight	Body		kg	14.0
Piping Connection	Liquid		mm(inch)	Ø6.35 (1/4)
	Gas		mm(inch)	Ø9.52 (3/8)

* CQ09, CQ12, CQ18 are compatible between SCAC and MULTI.

INDOOR				CQ12.NA0	CQ18.NA0
Capacity	Cooling / Heating	Nom	kW	3.5 / 3.9	5.3 / 5.8
Power Input		Nom	W	20	40
Running Current		Nom	A	0.6	0.7
Power Supply			V, Ø, Hz	220-240, 1, 50	220-240, 1, 50
Air Flow Rate		H / M / L	m³/min	9.0 / 6.9 / 5.2	10.1 / 8.6 / 7.2
Sound Pressure	Cooling	H / M / L	dB(A)	39 / 32 / 27	44 / 39 / 35
Sound Power	Cooling	Max	dB(A)	56	60
Dehumidification Rate			l/h	1.4	2.3
Dimensions	Body	W x H x D	mm	700 × 600 × 210	700 × 600 × 210
Net Weight	Body		kg	14.0	14.0
Piping Connection	Liquid		mm(inch)	Ø6.35 (1/4)	Ø6.35 (1/4)
	Gas		mm(inch)	Ø9.52 (3/8)	Ø12.7 (1/2)

※ For our policy of continuous product improvement, specification, design and features are subject to change without prior notice.
Note : 1. Capacities are based on the following conditions :
Cooling : - Indoor Temperature 27°C (80.6°F) DB / 19°C (66.2°F) WB - Outdoor Temperature 35°C (95°F) DB / 24°C (75.2°F) WB
Heating : - Indoor Temperature 20°C (68°F) DB / 15°C (59°F) WB - Outdoor Temperature 7°C (44.6°F) DB / 6°C (42.8°F) WB
Piping Length - Interconnecting Piping Length 7.5m - Level Difference of Zero
2. Definition of Power Input Nominal conditions – Performance tested under EN14511
3. Due to our policy of innovation some specifications may be changed without notification
4. This product contains fluorinated greenhouse gases (R410A)