SOLAX

X1/X3-HAC

4.6 kW / 7.4 kW / 11 kW / 22 kW

User Manual

Version 8.0

www.solaxpower.com

eManual in the QR code or
at www.solaxpower.com

STATEMENT

Copyright

Copyright © SolaX Power Network Technology (Zhejiang) Co., Ltd. All rights reserved.

No part of this manual may be reproduced, transmitted, transcribed, stored in a retrieval system, or translated into any language or computer language, in any form or by any means without the prior written permission of SolaX Power Network Technology (Zhejiang) Co., Ltd.

Trademarks

SOLAX POWER and other symbol or design (brand name, logo) that distinguishes the products or services offered by SolaX has been trademark protected. Any unauthorized use of the above stated trademark may infringe the trademark right.

Notice

Please note that certain products, features, and services mentioned in this document may not be within the scope of your purchase or usage. Unless otherwise specified in the contract, the contents, information, and recommendations presented in this document are provided "as is" by SolaX. We do not provide any warranties, guarantees, or representations, whether express or implied.

The content of the documents is reviewed and updated as needed. However, occasional discrepancies may occur. SolaX retains the right to make improvements or changes in the product(s) and the program(s) described in this manual at any time without prior notice.

The images included in this document are solely for illustrative purposes and may differ based on the specific product models.

For more detailed information, kindly visit the website of SolaX Power Network Technology (Zhejiang) Co., Ltd. at www.solaxpower.com.

SolaX retains all rights for the final explanation.

About This Manual

Scope of Validity

This manual is an integral part of X1/X3-HAC Series EV-Charger.
It describes the transportation, storage, installation, electrical connection, commissioning, maintenance and troubleshooting of the product. Please read it carefully before operating.

This manual is valid for the following models:

X1-HAC-4P	X1-HAC-4P-B
X1-HAC-4P-L	X1-HAC-4P-L-B
X1-HAC-7P	X1-HAC-7P-B
X1-HAC-7S	X1-HAC-7S-B
X3-HAC-11P	X3-HAC-11P-B
X3-HAC-11S	X3-HAC-11S-B
X3-HAC-22P	X3-HAC-22P-B
X3-HAC-22S	X3-HAC-22S-B
X1-HAC-7P-L	X1-HAC-7P-L-B
X1-HAC-7S-L	X1-HAC-7S-L-B
X3-HAC-11P-L	X3-HAC-11P-L-B
X3-HAC-11S-L	X3-HAC-11S-L-B
X3-HAC-22P-L	X3-HAC-22P-L-B
X3-HAC-22S-L	X3-HAC-22S-L-B
X1-HAC-7P-B4G	X1-HAC-7S-B4G
X3-HAC-11P-B4G	X3-HAC-11S-B4G
X3-HAC-22P-B4G	X3-HAC-22S-B4G
X1-HAC-7P-E	X1-HAC-7S-E
X3-HAC-11P-E	X3-HAC-11S-E
X3-HAC-22P-E	X3-HAC-22S-E

Model description

X3-HAC-22P-L-B

1 2 3 4 5 6

Item	Description
1	"X1": single-phase; "X3": three-phase
2	"HAC": the product family name
3	"4": the nominal output power is 4.6 kW; "7": the nominal output power is 7.4 kW; "11": the nominal output power is 11 kW; "22": the nominal output power is 22 kW
4	"P": Plug Type (also called Connector Type), with charging cable and connector; "S": Socket Type, only socket outlet
5	"L": with LCD screen; blank without LCD screen "E": with PEN protection function; blank without PEN protection
6	"B": black for the decoration cover; white without "B" "4G": If named with "4G", the specific model is equipped with 4G function

Target Group

The installation, maintenance and grid-related setting can only be performed by qualified personnel who:

- Are licensed and/or satisfy state and local regulations.
- Have good knowledge of this manual and other related documents.

Conventions

The symbols that may be found in this manual are defined as follows.

Symbol	Description
DANGER	Indicates a hazardous situation which, if not avoided, will result in death or serious injury.
WARNING	Indicates a hazardous situation which, if not avoided, could result in death or serious injury.

Symbol	Description
⚠ CAUTION!	Indicates a hazardous situation which, if not avoided, could result in minor or moderate injury.
NOTICE!	Provides tips for the optimal operation of the product.

Change History

Version 8.0 (2026-07-24)

Updated "6.2 Installation and Wiring Steps" (Updated the descriptions about DI signal input connection)

Updated "14 Technical Data" (Updated 7.2 kW models to 7.4 kW and all related contents elsewhere in this manual)

Added "15.5 Configuration for TOR R37 Regulation"

Updated all contents related to the App (based on App version 7.5.0)

Version 7.0 (2026-04-21)

Updated "6.2 Installation and Wiring Steps" (Added a notice about communication with inverter)

Version 6.0 (2026-01-15)

Updated "2.2 Supported Power Grid" (Updated the figures of supported power grid)

Updated "2.3.3 States" and "12.2 Troubleshooting" (Updated contents about electronic lock fault)

Updated "6.2 Installation and Wiring Steps" (Updated the descriptions about LAN and DI connection)

Updated all contents related to the App (based on App version 6.15.0)

Version 5.0 (2025-08-05)

Updated all contents related to the App (based on App version 6.10.0)

Updated "14 Technical Data" (Updated the contents)

Version 4.0 (2025-02-28)

Updated "5.2 Scope of Delivery", "6.2 Installation and Wiring Steps" and "9.4 Overview of the Setting Page" (Added contents about DI signal input connection)

Version 3.0 (2025-02-17)

Updated all contents related to the App (based on App version 6.5.0)

Updated "12.2 Troubleshooting" (Updated the suggested solutions)

Updated "14 Technical Data" (Updated data related to communication info)

Added "15.4 4G Function" (Added contents about 4G function and updated contents related to 4G models elsewhere in this manual)

Version 2.0 (2024-09-30)

Updated "8.1.1 Downloading and Installing App" (Updated the QR code)

Updated "9.3 Overview of the Setting Page" (Added the LCD language setting item)

Updated "10.3.1 Charging modes in Solar Scene" (Updated the descriptions of charging modes)

Added "15.3 Voice Control Function" (Added the function descriptions)

Version 1.0 (2024-07-10)

Added contents about screen

Updated "5.1 Unpacking" (Updated the figures)

Updated all contents related to the App (based on App version 6.0.0)

Version 0.0 (2024-05-21)

Initial release

Table of Contents

1 Safety 1

1.1 General Safety 1

1.2 Safety Instructions 1

2 Product Overview 3

2.1 Product Introduction 3

2.2 Supported Power Grid 3

2.3 Appearance 5

2.3.1 Dimensions 7

2.3.2 Front Panel 8

2.3.3 States 9

2.4 Symbols on the Label 11

2.5 Principle Circuit Diagram 12

3 Transportation and Storage 13

4 Preparation before Installation 14

4.1 Selection of Installation Location 14

4.1.1 Environment Requirement 14

4.1.2 Installation Carrier Requirement 16

4.1.3 Clearance Requirement 16

4.2 Tools Requirement 17

4.3 Additionally Required Materials 18

5 Unpacking and Inspection 19

5.1 Unpacking 19

5.2 Scope of Delivery 20

6 Installation and Wiring 22

6.1 Decide Application Scenario 23

6.2 Installation and Wiring Steps 26

7 Power on 44

7.1 Checking before Powering on 44

7.2 Powering on 44

8 App Setting 45

8.1 Download, Registration and Login 45

8.1.1 Downloading and Installing App 45

8.1.2 App Registration and Login 45
8.2 Configuration 46
8.2.1 Add Device 46
8.2.2 Wi-Fi Connection 47
8.2.3 Local Mode 47
9 Settings for EV-Charger 48
9.1 Introduction of Details Page 48
9.2 Overview of the Settings Page 50
10 Operation Method 54
10.1 Activation Mode Setting 54
10.2 Application Scene Setting 55
10.3 Detailed Function Operation 57
10.3.1 Charging modes in Solar Scene 57
10.3.2 Boost Settings in Solar Scene 60
10.3.3 Dynamic Load Balance 62
10.3.4 Auto Phase-Switching 63
10.3.5 Modbus Setting 64
10.3.6 Charging Phase 64
10.3.7 Three-phase Imbalance 64
10.3.8 Random Charging Delay 65
10.3.9 Grid Type Setting 66
10.3.10 Charging Restrict 66
10.3.11 Maximum Charging Current 68
10.3.12 Schedule Charging Setting 69
11 Screen Display 71
11.1 Description of Icons on the Screen 71
11.2 Description of Status Screen 73
12 Troubleshooting and Maintenance 77
12.1 Power off 77
12.2 Troubleshooting 77
12.3 Maintenance 82
13 Decommissioning 83
13.1 Disassembling the EV-Charger 83
13.2 Packing the EV-Charger 83
13.3 Disposing of the EV-Charger 83
14 Technical Data 84

15 Appendix 87
15.1 RFID Management Function 87
15.1.1 Introduction of RFID Management Function 87
15.1.2 Operation of RFID Management Function 87
15.2 Parallel Function 88
15.2.1 Introduction of Parallel Function 88
15.2.2 Connection Method 89
15.2.3 Settings for Parallel Function 91
15.3 Voice Control Function 92
15.3.1 Introduction of Voice Control Function 92
15.3.2 Operation of Voice Control Function 92
15.4 4G Function 94
15.4.1 4G SIM Card Preparation 94
15.4.2 Installation of SIM Card 95
15.4.3 4G Configuration 97
15.5 Configuration for TOR R37 Regulation 99

1 Safety

1.1 General Safety

The series EV-Charger has been meticulously designed and tested to comply with the relevant state and international safety standards. Nevertheless, like all electrical and electronic equipment, safety precautions must be observed and followed during the installation of the EV-Charger to minimize the risk of personal injury and ensure a safe installation.

Please carefully read, fully comprehend, and strictly adhere to the comprehensive instructions provided in the user manual and any other relevant regulations prior to the installation of the EV-Charger. The safety instructions in this document serve as supplementary guidelines to local laws and regulations.

SolaX shall not be liable for any consequences resulting from the violation of the storage, transportation, installation, and operation regulations outlined in this document. Such consequences include, but are not limited to:

- EV-Charger damage caused by force majeure events, such as earthquakes, floods, thunderstorms, lightning, fire hazards, volcanic eruptions, and similar events.
- EV-Charger damage due to human causes.
- EV-Charger damage caused by strong vibrations from external factors before, during and after installation.
- Usage or operation of the EV-Charger in violation of local policies or regulations.
- Failure to comply with the operation instructions and safety precautions provided with the product and in this document.
- Improper installation or usage of the EV-Charger in unsuitable environmental or electrical conditions.
- Unauthorized modifications made to the product or its software.
- EV-Charger damage occurring during transportation by the customer.
- Storage conditions that do not meet the requirements specified in this document.
- Installation and commissioning performed by unauthorized personnel who lack the necessary licenses or do not comply with state and local regulations.

1.2 Safety Instructions

Save these important safety instructions. Failure to follow these safety instructions may result in damage to the EV-Charger and injury or even loss of life.

DANGER!

- Danger to life due to output and input high voltages in this device.
- Do not attempt to open the enclosure without authorization from SolaX. Unauthorized opening of the enclosure will void the warranty and can result in lethal danger or serious injury due to electric shock.
- Do not use an extension cord on the EV-Charger, or it may cause a risk of fire or electric shock.
- Do not use the EV-Charger if the device has defects, cracks, abrasion, or shows other signs of damage.
- Disconnect the power supply to the EV-Charger before installation, maintenance and other operations.

WARNING!

- Keep away from flammable, explosive materials and humid or corrosive substance.
- The device is intended only for charging electric vehicles. Do not charge other devices.
- In case any emergency condition happens, press the EMERGENCY STOP button immediately, cut off all input and output power supply.
- During charging, the electric vehicle is not allowed to drive. Charging only when the electric vehicle stays still. For hybrid car, charging only when switching the engine off.
- Do not touch live electrical parts of the EV-Charger, especially when during charging.
- Charge with caution in case of rainy or thundering weather.

CAUTION!

- Keep children away from the EV-Charger.
- During operation, the EV-Charger may become hot. There may be burn injuries caused by hot surface.
- Incorrect operation or misuse may result in: Injury or death to the operator or third parties; Damage to the device and other property of the operator; Inefficient operation of the device.

NOTICE!

- All operations shall be in compliance with local laws and regulations.
- Do not use cleaning solvents to clean any part of the EV-Charger. Clean the device with a clean, dry cloth to remove dust and dirt.
- Keep all product labels and the nameplate on the EV-Charger clearly visible and well-maintained.

NOTICE!

- Only connect the EV-Charger to the grid with the permission of the local utility grid company.

2 Product Overview

2.1 Product Introduction

The X1/X3-HAC series are AC EV charger and intended only for charging electric vehicles. It should be installed in a fixed location and connected to the AC supply. The EV-Charger can communicate with other devices or systems (inverter, meter, CT, third-party charger management platform, etc.) to realize intelligent control of charging process. For details, please refer to "6.1 Decide Application Scenario".

2.2 Supported Power Grid

There are different ways of wiring for different grid systems. Models named without "-E" support TN-S, TT (High-voltage), TT (Low voltage) and IT; models named with "-E" support TN-C-S. Three-phase EV-Charger supports three-phase wiring (A) and single-phase wiring (B). Shown as below:

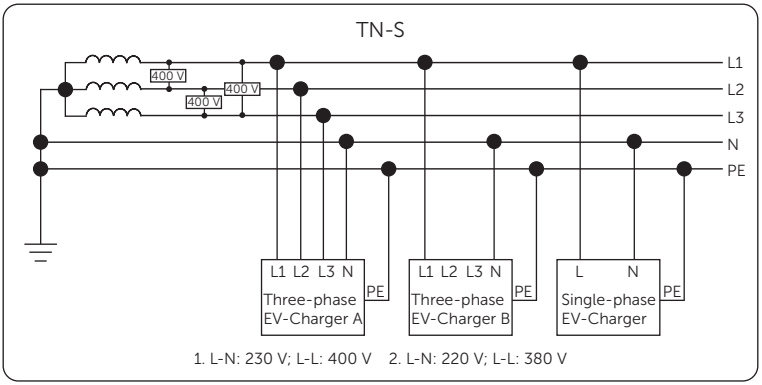

Figure 2-1 Supported power grid for models named without "-E" - TN-S

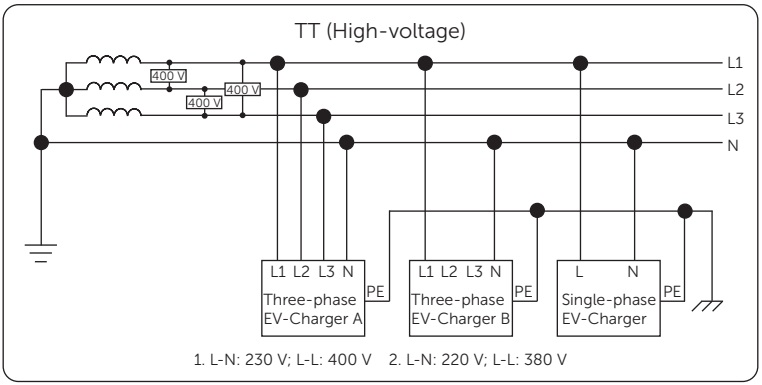

Figure 2-2 Supported power grid for models named without "-E" - TT (High-voltage)

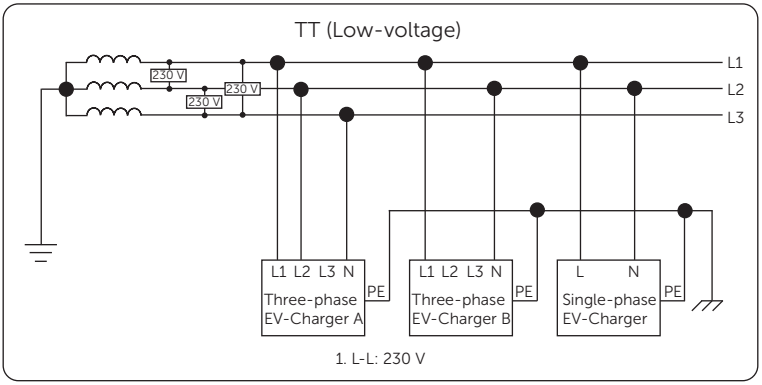

Figure 2-3 Supported power grid for models named without "-E" - TT (Low-voltage)

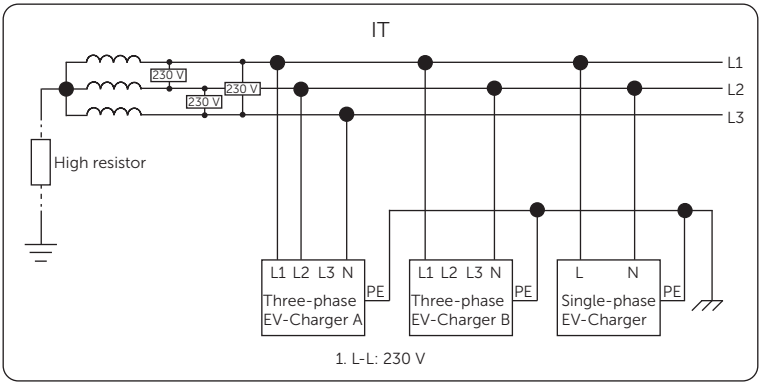

Figure 2-4 Supported power grid for models named without "-E" - IT

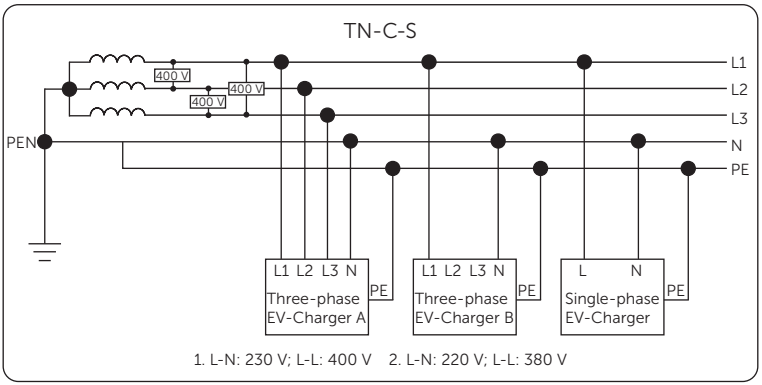

Figure 2-5 Supported power grid for models named with "-E" - TN-C-S

2.3 Appearance

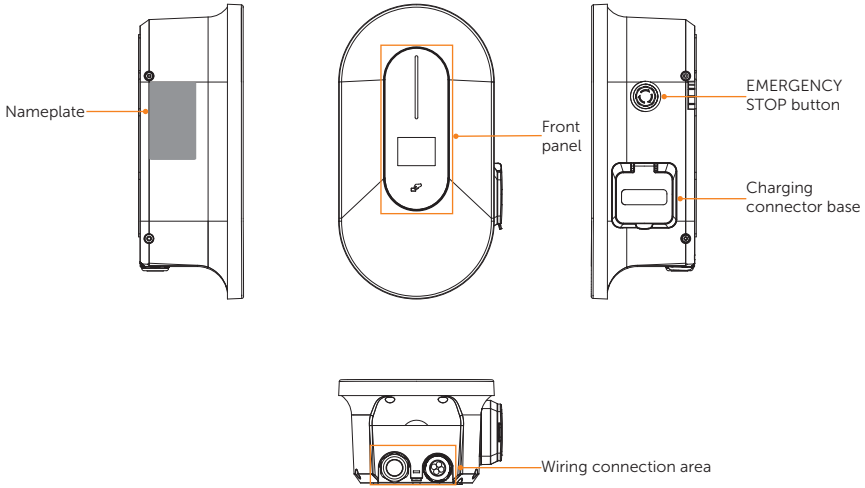

Figure 2-6 Appearance of Socket Type

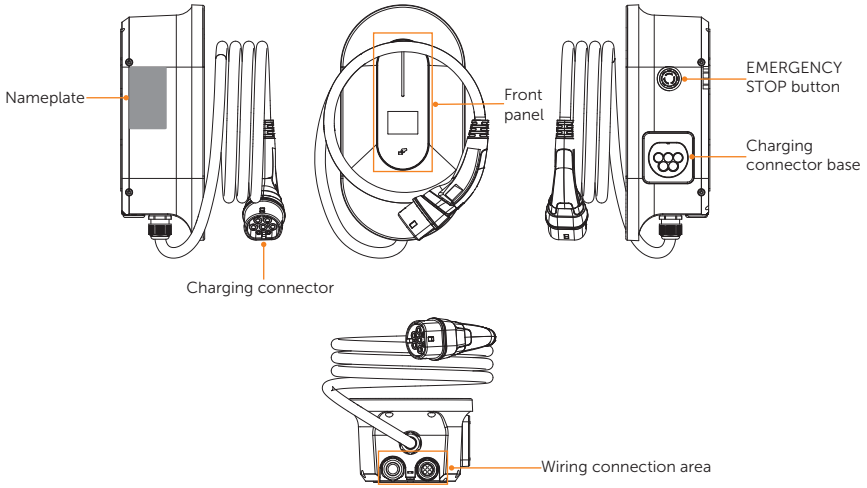

Figure 2-7 Appearance of Plug Type

Table 2-1 Description of appearance

Item	Description
Nameplate	Nameplate clearly identifies the device type, serial number, specific parameters, certification, etc.
Front panel	Including LED indicator, LCD screen (optional) and card swiping position. LED indicator indicates the operating status of the EV-Charger. LCD screen displays the information. Card swiping position is for swiping RFID card.
EMERGENCY STOP button	Press the button in emergency, the EV-Charger will stop charging. (In some areas, the device is not equipped with this button.)
Charging connector base	Socket outlet (for Socket Type) / Connector holder (for Plug Type)
Wiring connection area	Including AC input terminal (for AC input connection) and communication terminal (for communication connection).
Charging connector	Charging connector for connecting EV (Only for Plug Type).

2.3.1 Dimensions

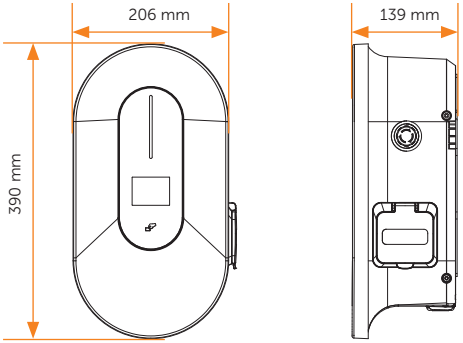

Figure 2-8 Dimensions of Socket Type

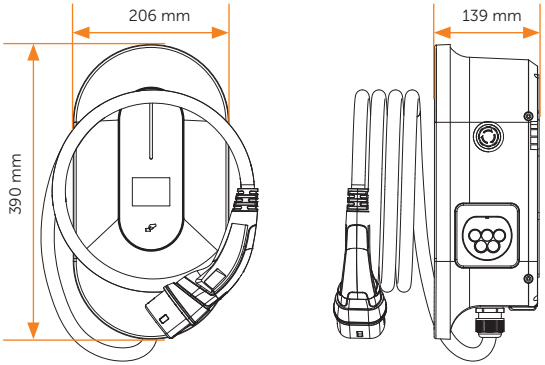

Figure 2-9 Dimensions of Plug Type

2.3.2 Front Panel

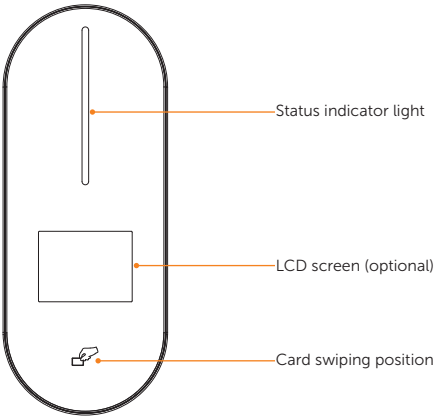

Figure 2-10 Front Panel

Table 2-2 Definition of front panel

Name	Definition
Status indicator light	The status light will be on according to the state of the EV-Charger. For details, please refer to "2.3.3 States".
LCD screen (optional)	The information of the EV-Charger will be displayed. For details, please refer to "11 Screen Display".
Card swiping position	Swipe RFID card here.

2.3.3 States

The states of this series of EV-Charger are described as below:

Table 2-3 States

No.	State of the EV-Charger	Indicator light colour	Status of the light	Remark
1	Available	Green	Solid/ Breathing	The EV-Charger is powered on and available for usage. The EV-Charger is on-line when it has solid light, and off-line when it has breathing light.
2	Preparing	Blue	Solid	The EV-Charger is connected with the vehicle and waiting to start charging.
3	Charging	Solar - Green: Green Solar - Eco: Cyan Solar - Fast: Fuchsia Standard: Fuchsia Scheduled: Blue OCPP: Fuchsia	Flowing	The EV-Charger is in charging process. The flowing speed of the light is determined by the charging power. Different colours are displayed according to the application scene and charging mode.
4	Finish	Cyan	Solid	The EV-Charger has completed charging.
5	ElecLock_ Fault	Yellow	Flashing for 2 seconds	(Only for Socket Type) The EV-Charger has a electronic lock fault. Please refer to corresponding solutions in "12.2 Troubleshooting".
6	Faulted	Red	Solid	The EV-Charger is in fault state. Please check the fault message in the App and refer to corresponding solutions in "12.2 Troubleshooting".
7	Unavailable	Yellow	Solid	The EV-Charger is not available for usage.

No.	State of the EV-Charger	Indicator light colour	Status of the light	Remark
8	Scheduled	Blue	Flashing for 1 second	The charging connector of the EV-Charger is plugged in but it hasn't been the time for scheduled setting yet.
9	Reserved	Orange	Flashing for 1 second	The EV-Charger has been reserved by another user.
10	ChargPause	Same as the colour of Charging status	Stop flowing	The charging process is suspended. The light will stay in the current flowing position and flash for 1 second.
11	Update	Yellow	Flowing	The EV-Charger is remote upgrading. The light will be displayed based on the upgrading process.
12	CardActivation	Purple	Flashing for 0.5 second	The EV-Charger is waiting for card-swiping to activate the cards.
13	StartDelay	Blue	Flowing backwards	The EV-Charger is in the random delay starting process. Display according to the percentage of the remaining count down time to the total random delay time.

2.4 Symbols on the Label

Table 2-4 Description of symbols

Symbol	Description
CE	CE mark of conformity
	RCM mark of conformity
	Caution, risk of electric shock
	Caution, risk of danger
	The EV-Charger can be recycled.
	Do not dispose of the EV-Charger together with household waste. Used electrical devices must be collected separately and recycled in an environmentally responsible manner. Ensure that you return your used device to your dealer or obtain information regarding a local, authorised collection and disposal system.

Note: The table is only used for the description of symbols which may be used on the EV-Charger. Please be subject to the actual symbols on the device.

2.5 Principle Circuit Diagram

The principle design of the EV-Charger is shown in the figure below:

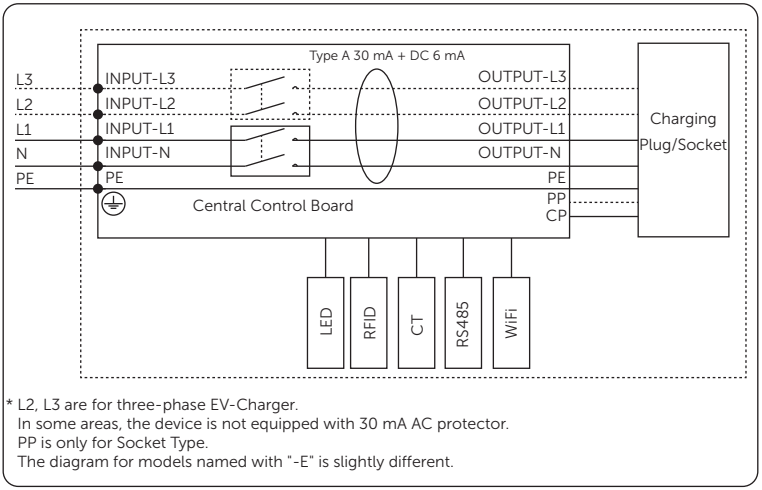

* L2, L3 are for three-phase EV-Charger.
In some areas, the device is not equipped with 30 mA AC protector.
PP is only for Socket Type.
The diagram for models named with "-E" is slightly different.

Figure 2-11 Principle Circuit Diagram

3 Transportation and Storage

If the EV-Charger is not put into use immediately, the transportation and storage requirements need to be met:

Transportation

- The EV-Charger must be transported in its original packaging. SolaX will not be held responsible for any damage to the EV-Charger caused by improper transportation or by transportation after it has been installed.
- Observe the caution signs on the packaging of EV-Charger before transportation.
- Pay attention to the weight of EV-Charger. Be cautious to avoid injury when carrying the EV-Charger.
- Wear protective gloves when carrying the equipment by hand to prevent injuries.
- When lifting up the EV-Charger, hold the bottom position of the EV-Charger. Keep it horizontal in case of falling down.

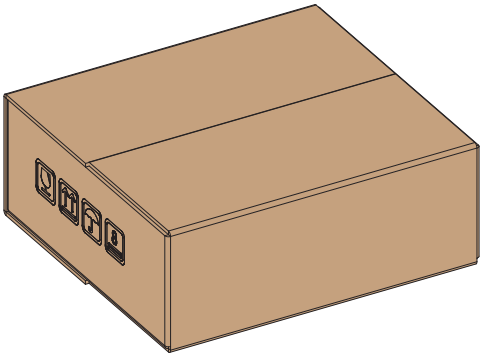

Figure 3-1 Caution signs on the packaging

Storage

- The EV-Charger must be stored indoors.
- Do not remove the original packaging material and check the outer packaging material regularly.
- The storage temperature should be between -40°C and +60°C. The humidity should be between 5%RH and 65%RH.
- Stack the EV-Charger in accordance with the caution signs on the carton to prevent their falling down and device damage. Do not place it upside down.

4 Preparation before Installation

4.1 Selection of Installation Location

The installation location selected for the EV-Charger is quite critical in the aspect of the guarantee of device safety, service life and performance. It has the IP65 ingress protection for Plug Type and IP54 ingress protection for Socket Type, which allows it to be installed outdoor. The installation position shall be convenient for wiring connection, operation and maintenance.

4.1.1 Environment Requirement

Make sure the installation environment meets the following conditions:

- The ambient temperature: -30°C to +50°C (without screen),
  -25°C to +50°C (with screen).
- The relative humidity shall be between 5–95%RH.
- Do not install the EV-Charger in the areas where the altitude exceeds 2000 m.
- Install the EV-Charger in a well-ventilated environment for heat dissipation. It is recommended to install an awning over the EV-Charger if it is installed on a support outdoor.
- Do not install the EV-Charger in areas with flammable, explosive and corrosive materials or near antennas.
- Avoid direct sunlight, rain exposure and snow accumulation.

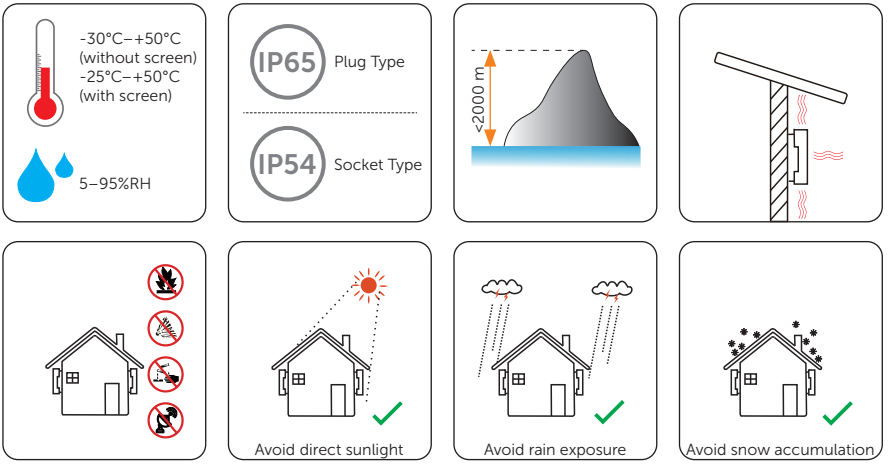

NOTICE!

- For outdoor installation, precautions against direct sunlight, rain exposure and snow accumulation are recommended.
- Exposure to direct sunlight raises the temperature inside the device. This temperature rise poses no safety risks, but may impact the device performance.

- Install the EV-Charger at least 500 meters away from the coast and avoid sea breeze directly hit.

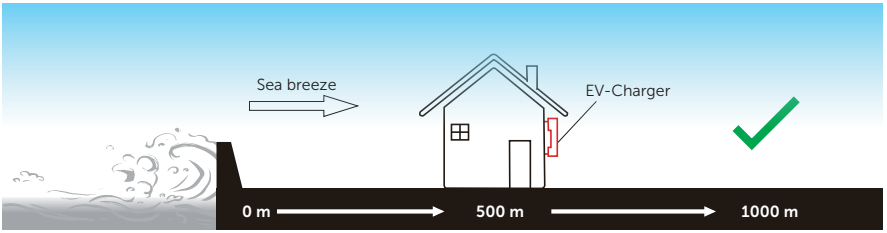

Figure 4-1 Recommended installation position

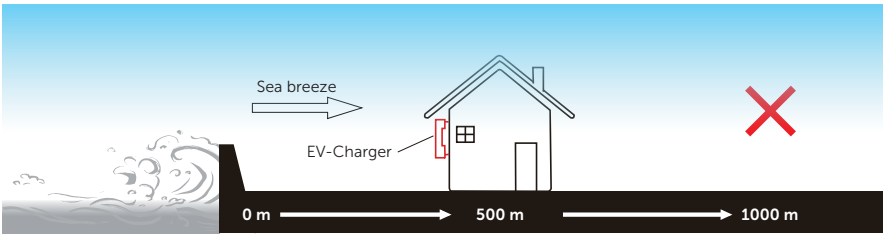

Figure 4-2 Incorrect installation position

4.1.2 Installation Carrier Requirement

The installation carrier must be made of a non-flammable material, such as solid brick, concrete, etc. and be capable of supporting the weight of the EV-Charger and suitable of the dimensions of the EV-Charger. If the wall strength is not enough (such as wooden wall, the wall covered by a thick layer of decoration), it must be strengthened additionally.

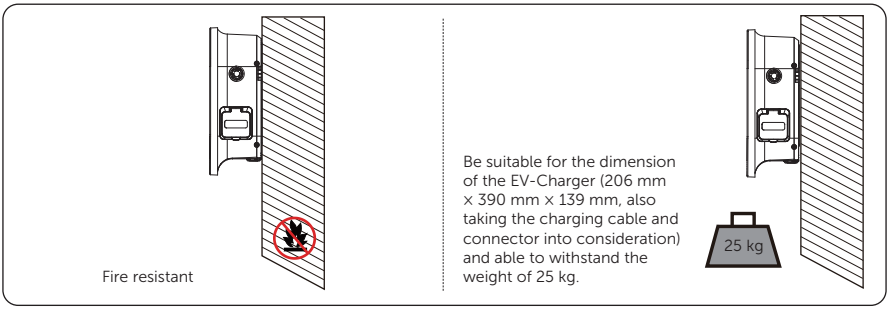

Figure 4-3 Installation carrier requirement

The EV-Charger can also be mounted on EVC pedestal provided by SolaX. For details, please refer to the quick installation guide of the pedestal.

4.1.3 Clearance Requirement

To guarantee proper heat dissipation and ease of installation, the minimum space around the EV-Charger is recommended to meet the standards indicated below and shall follow the local regulations and standards.

In areas with high ambient temperatures, increase the clearances and provide adequate fresh air ventilation if feasible.

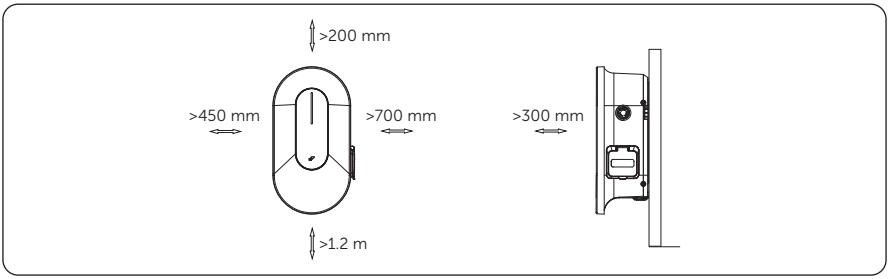

Figure 4-4 Clearance requirement

4.2 Tools Requirement

Installation tools include but are not limited to the following recommended ones. If necessary, use other auxiliary tools on site. Please note that the tools used must comply with local regulations.

Hammer drill
(drill bit: Ø8 mm)

Marker

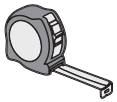

Measuring tape

Utility knife

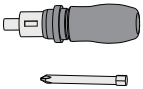

Torque screwdriver
(Phillips head: M4/M5/ ST3.5/ST4.8)

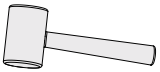

Rubber mallet

Wire stripper

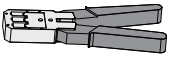

Crimping tool
for RJ45

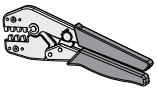

Crimping tool for
R-type terminal

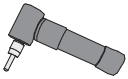

Electric screwdriver
(hexagonal head: M4/M5)

Spirit level

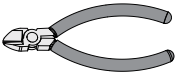

Diagonal pliers

Heat gun

Heat shrink tubing
(Ø6 mm)

Safety gloves

Safety boots

Safety goggles

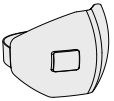

Anti-dust mask

4.3 Additionally Required Materials

Table 4-1 Additionally required materials

No.	Required Material	Type
1	RCBO *	Type A RCD with a trip current of ≤ 30 mA; 2P and rated current ≥ 25 A for 4.6 kW, 2P and rated current ≥ 40 A for 7.4 kW, 4P and rated current ≥ 20 A for 11 kW, 4P and rated current ≥ 40 A for 22 kW
2	AC input cable	Three-core copper wire for single-phase, five-core copper wire for three-phase; Outer diameter: 11–20.5 mm; Conductor cross-section for copper wire: ≥ 4 mm^2 for 4.6 kW and 11 kW, ≥ 6 mm^2 for 7.4 kW and 22 kW
3	Communication cable	Network cable CAT5 (better with RJ45); Conductor cross-section: 0.2 mm^2
4	Meter (optional)	Contact with the installer for type recommendation
5	Padlock (optional)	With a diameter ≤ 5.5 mm
6	RJ45 coupler (optional)	One-to-two in-line coupler
7	4G SIM card (optional)	Nano SIM

* Please choose and install appropriate RCBO according to local regulations.

5 Unpacking and Inspection

5.1 Unpacking

- The EV-Charger undergoes 100% testing and inspection before delivery. However, damages may still occur during transportation. Before unpacking, please carefully check the external packaging for any signs of damage, such as punctures or cracks.
- Unpacking the EV-Charger according to the following figures.

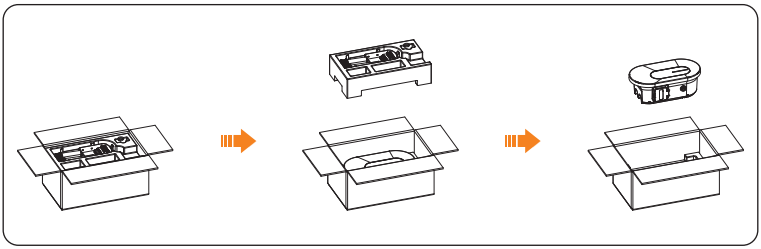

Figure 5-1 Unpacking the Socket Type EV-Charger

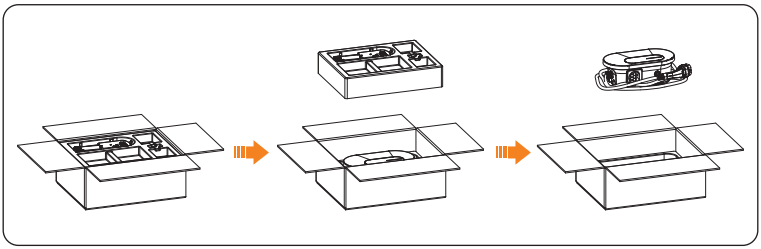

Figure 5-2 Unpacking the Plug Type EV-Charger

- Properly handle all the packaging materials in case they may be reused for storage and transportation of the EV-Charger in the future.
- Upon opening the package, check whether the EV-Charger is intact and whether all accessories are included. If any damage is found or any parts are missing, contact your dealer immediately.

5.2 Scope of Delivery

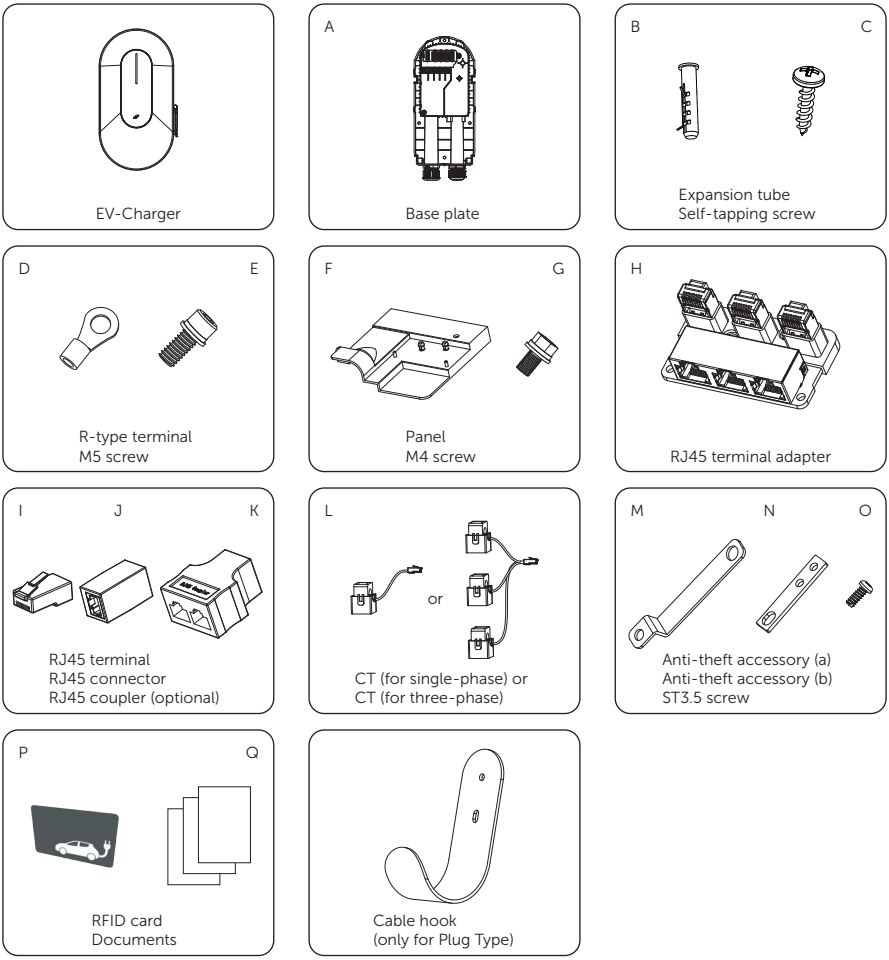

Table 5-1 Packing list

Item	Description	Quantity	Remark
/	EV-Charger	1	
A	Base plate	1	
B	Expansion tube	4 for Socket Type, 6 for Plug Type	For installation of the base plate and cable hook

Item	Description	Quantity	Remark
C	Self-tapping screw	4 for Socket Type, 6 for Plug Type	For installation of the base plate and cable hook
D	R-type terminal	3 for single-phase, 5 for three-phase	For AC input connection
E	M5 screw	4	For fixing the EV-Charger on the base plate
F	Panel	1	
G	M4 screw	1	For securing the panel
H	RJ45 terminal adapter	1	For communication connection
I	RJ45 terminal	4	
J	RJ45 connector	1	For extension connection of CT
K	RJ45 coupler (optional)	1	For when both DI signal input connection and LAN connection are needed
L	CT	1	Single-phase CT for single-phase EV-Charger, three-phase CT for three-phase EV-Charger. The cable length of CT is 1 m. Only for connecting with the EV-Charger
M	Anti-theft accessory (a)	1	
N	Anti-theft accessory (b)	1	
O	ST3.5 screw	2	For securing anti-theft accessory (b)
P	RFID card	2	
Q	Documents	/	
/	Cable hook	1	Only for Plug Type

NOTICE!

- Refer to the actual delivery for the optional accessories.

6 Installation and Wiring

WARNING!

- Only qualified personnel are allowed to perform the mechanical installation in accordance with local laws and regulations.
- Check the existing power cables or other piping in the wall to prevent electric shock or other damage.
- Use insulated tools and wear personal protective equipment throughout the installation and maintenance process.

CAUTION!

- During installation, always be cautious about the weight of the EV-Charger. Improper lifting or dropping of the EV-Charger may result in personal injury.

NOTICE!

- Install the EV-Charger at a maximum back tilt of 5 degrees and avoid it being forward tilted, side tilted, or upside down.

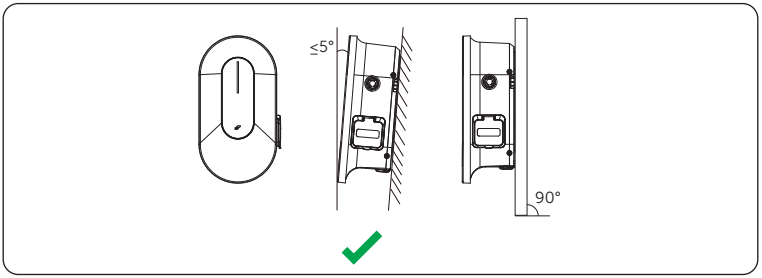

Figure 6-1 Correct installation

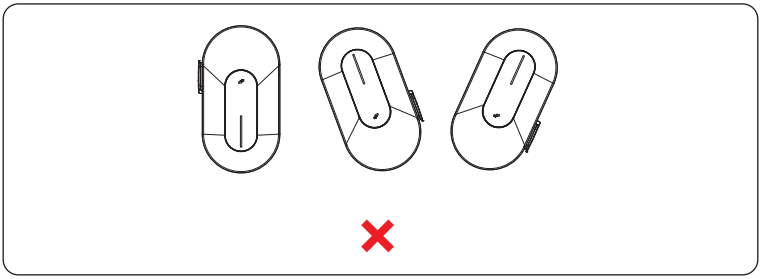

Figure 6-2 Incorrect installation

6.1 Decide Application Scenario

The EV-Charger offers different application scenarios and the communication connection is different under different application scenario. Please decide the application scenarios before installation.

If the user wants to use more than one EV-Charger in one system, please refer to "15.2 Parallel Function".

NOTICE!

- When powered on after completing the installation, the system will automatically identify the grid data source of the grid side (Priority: Inverter > Meter > CT).

Solar Scene

In Solar scene, the EV-Charger can work with the inverter system to make more efficient use of the photovoltaic energy.

- Communication with Inverter

The EV-Charger can work with the inverter system which supports communication with it to form an intelligent photovoltaic, storage and EV charging energy system. Through communicating with the inverter, the EV-Charger can obtain the current information of the grid and PV and realize the smart control of different charging modes.

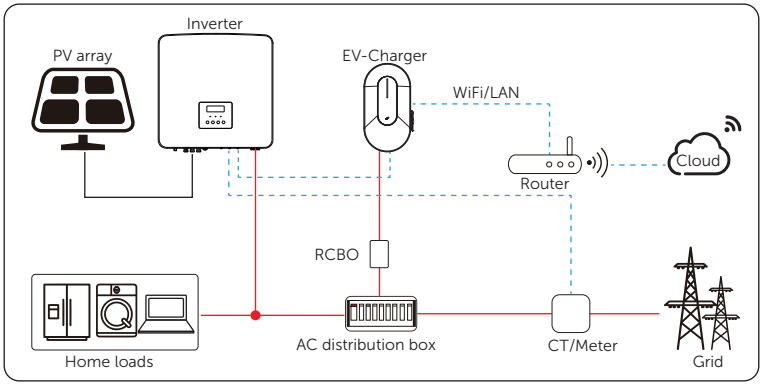

Figure 6-3 Solar scene and communication with inverter

NOTICE!

- If the system has zero injection requirement, the EV-Charger must communicate with the inverter.

- Communication with CT/Meter

The EV-Charger can work with the inverter system which does not support communication with it to form an intelligent photovoltaic, storage and EV charging energy system. Through communicating with CT or meter, the EV-Charger can obtain the current information and realize the smart control of different charging modes. However, if the inverter has zero injection requirement, Green or Eco charging mode of the EV-Charger may not work normally.

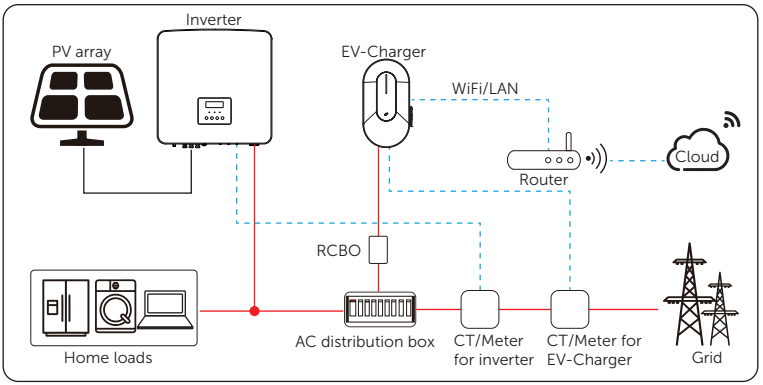

Figure 6-4 Solar scene and communication with CT/meter

Standard Scene

The EV-Charger is to be operated only as a standard charger stand alone in this scene. Through communicating with CT or meter, the EV-Charger can realize the smart control of the charging process.

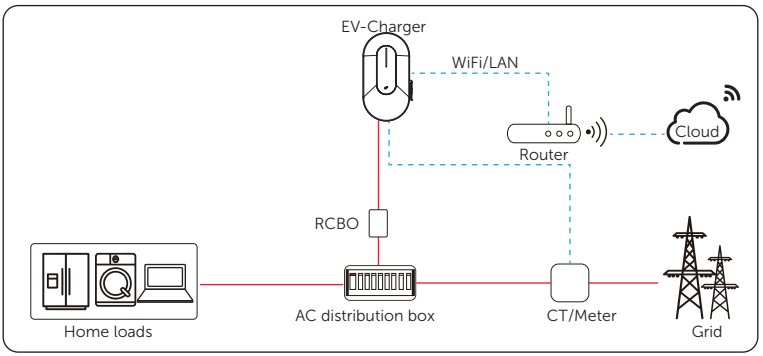

Figure 6-5 Standard scene

OCPP Scene

The EV-Charger can be connected with the OCPP server and controlled by the OCPP server.

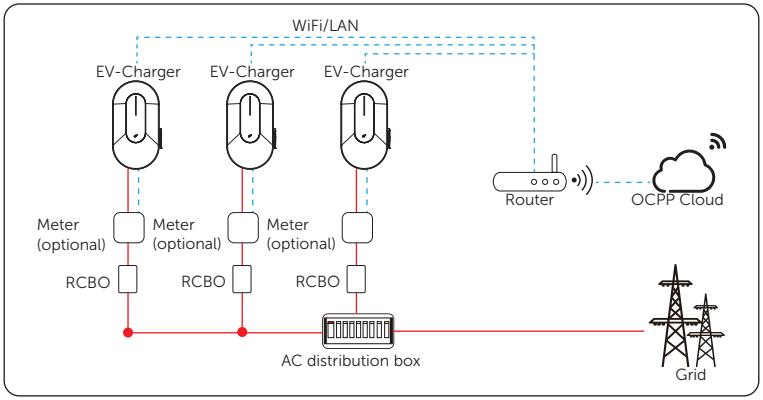

Figure 6-6 OCPP scene

6.2 Installation and Wiring Steps

WARNING!

- Disconnect the AC power supply before electrical connection. Do not work with the power on, or electric shock may occur.
- Only qualified personnel are allowed to perform the electrical connection following local laws and regulations.
- Strictly follow the instructions of this manual or other related documentation for electrical connection. Damages caused by incorrect wiring are not covered by the warranty.
- Use insulated tools and wear personal protective equipment throughout the electrical connection process.

The following descriptions of installation and wiring steps are described taking three-phase EV-Charger as an example.

Step 1: Use the base plate (part A) (and the cable hook for Plug Type) as a template to mark the position of the holes on the wall.

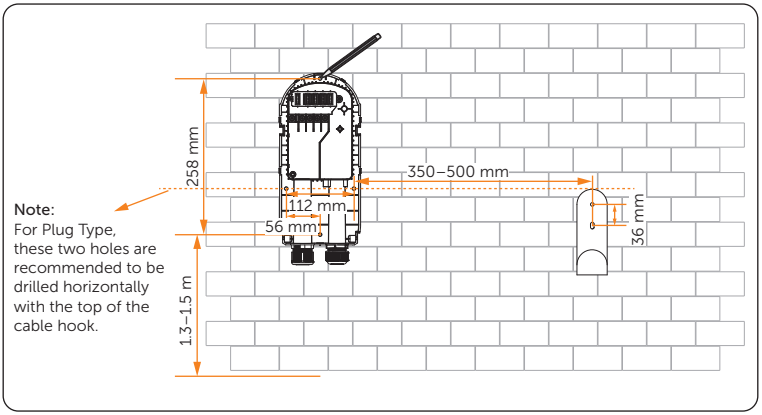

Figure 6-7 Mark the holes

Step 2: Set the base plate (and the cable hook for Plug Type) aside and drill holes with Ø8 drill bit, make sure the holes are deep enough for the installation (Depth: at least 45 mm).

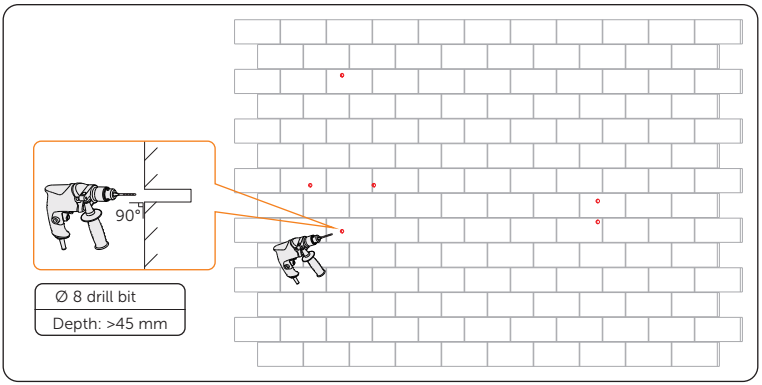

Figure 6-8 Drill the holes

Step 3: Insert the expansion tubes (part B) in the holes.

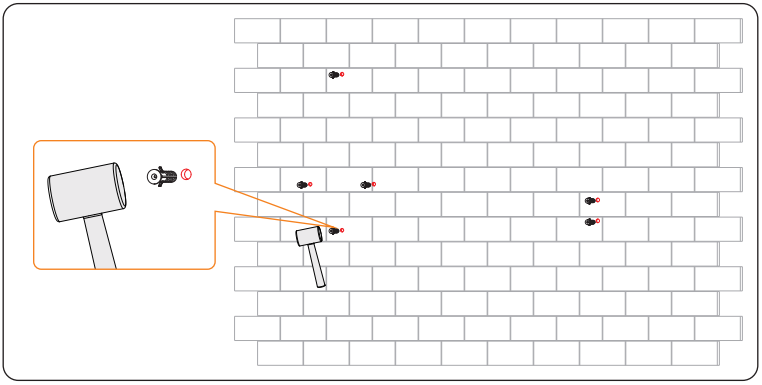

Figure 6-9 Insert the expansion tubes

Step 4: Align the base plate (and the cable hook for Plug Type) with the holes, and screw the self-tapping screws (part C) with a Phillips-head torque screwdriver.

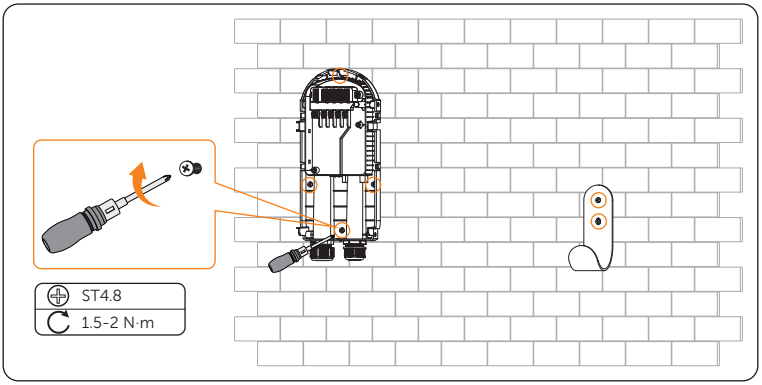

Figure 6-10 Secure the base plate (and the cable hook)

* (Optional) If the user wants to install the padlock for safety reasons, install the anti-theft accessory (a) (part M) before tighten the screw at the bottom part of the base plate.

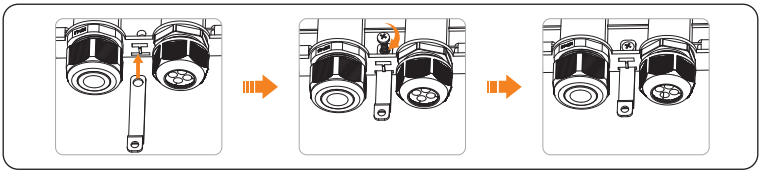

Figure 6-11 Install anti-theft accessory (a)

Step 5: Prepare and process the AC input cable.

a. Strip the insulation jacket of the AC input cable to an appropriate length.

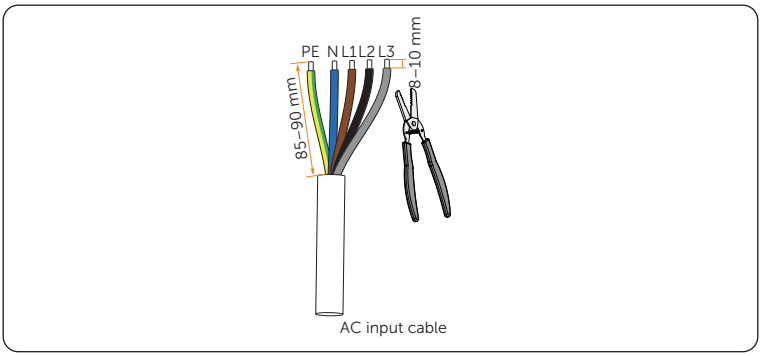

Figure 6-12 Strip the AC input cable

b. Pull the heat shrink tubing over the AC input cable and insert the stripped section of the wires into the R-type terminals (part D).

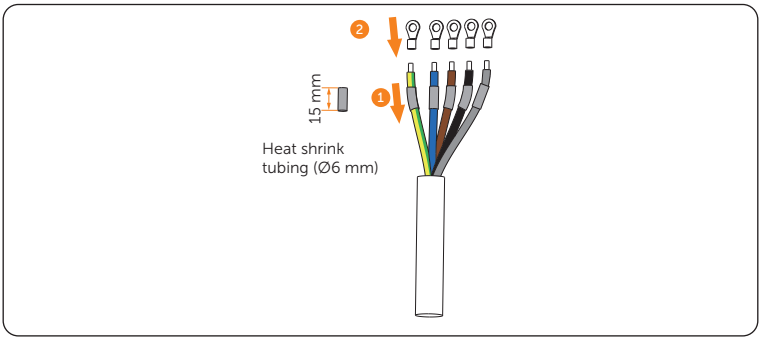

Figure 6-13 Install the tubing and R-type terminal

c. Crimp them with crimping tool, then pull the heat shrink tubing over the stripped section of the R-type terminals and use a heat gun to shrink them so that they can be firmly contacted with the terminals.

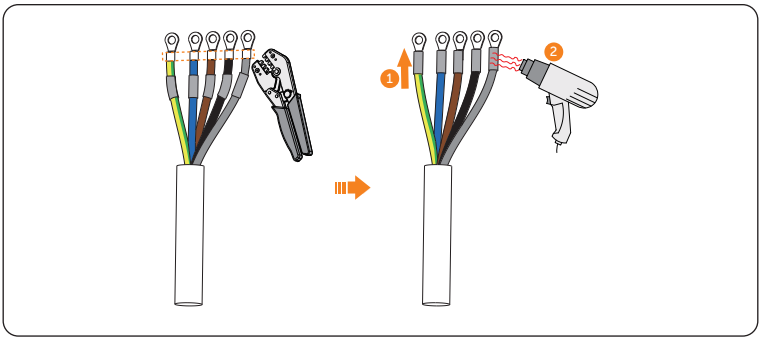

Figure 6-14 Crimp the cable and shrink the tubing

Step 6: Remove the screws from the upper part of the base plate, loosen the swivel nut from the AC input terminal and then taking out the sealing ring.

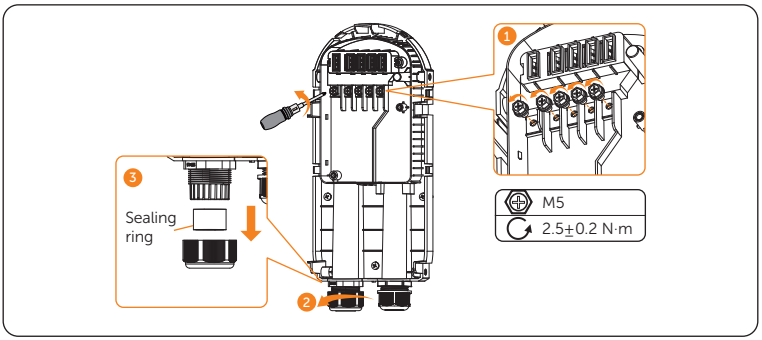

Figure 6-15 Remove the screws and loosen the swivel nut

Step 7: Thread the AC input cable in sequence as shown below. Take the outer diameter of the AC input cable into account to deal with the sealing ring.

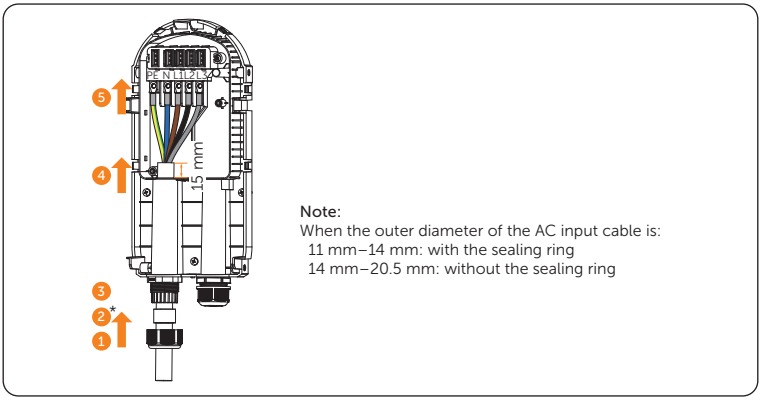

Figure 6-16 Thread the AC input cable

Step 8: Make sure the wires are connected correspondingly and secure them with a Phillips-head torque screwdriver.

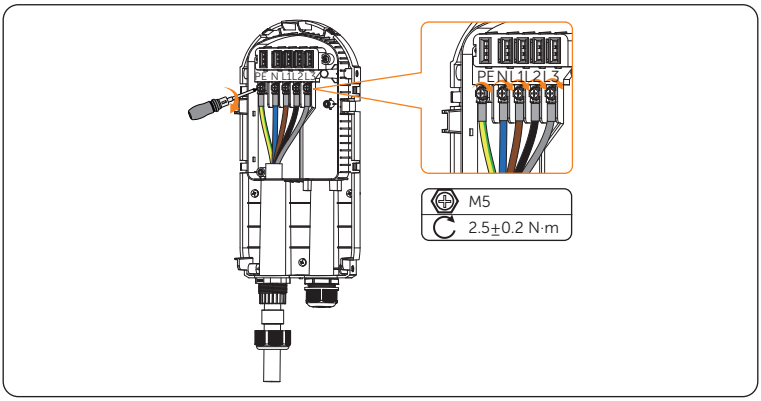

Figure 6-17 Secure the wires of AC input cable

Step 9: Push up the sealing ring and the swivel nut to an appropriate position, then tighten the swivel nut of the AC input terminal.

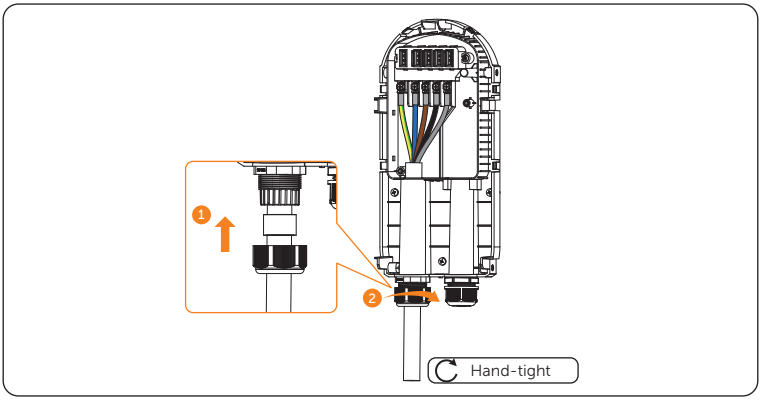

Figure 6-18 Tighten the swivel nut of the AC input terminal

Step 10: Align the panel (part F) with the base plate and clamp it on the two buckles on the left.

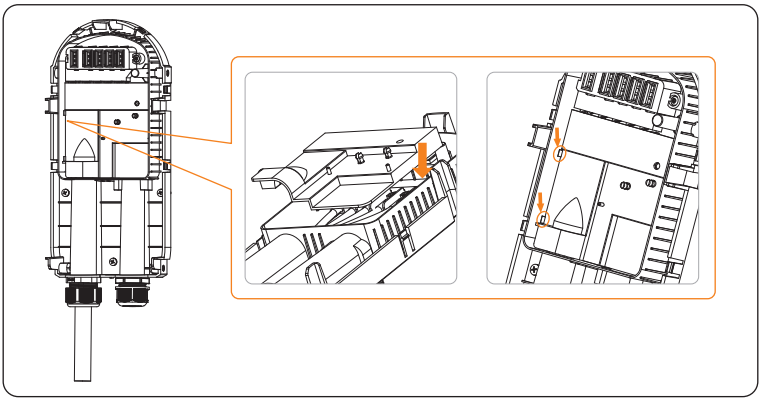

Figure 6-19 Align the panel

Step 11: Secure the M4 screw (part G) on the right of the panel to fix it on the base plate.

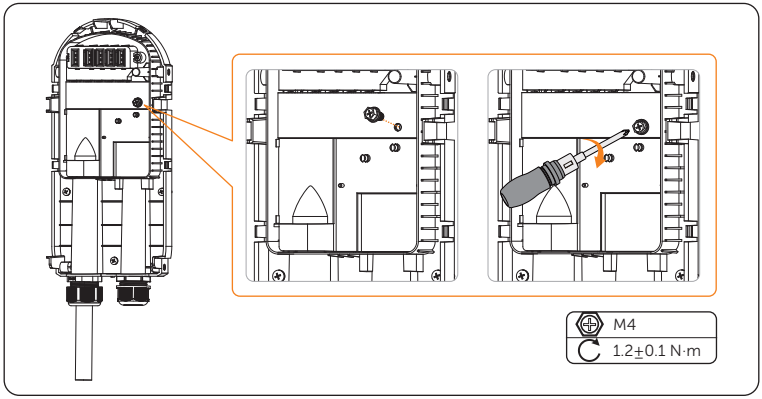

Figure 6-20 Secure the M4 screw

Step 12: Align and clamp the four holes on the RJ45 terminal adapter (part H) with the four cylinders on the panel.

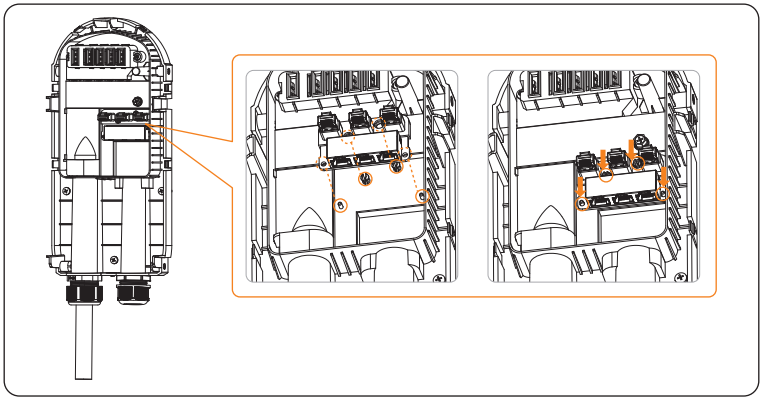

Figure 6-21 Install the RJ45 terminal adapter

Pin definition of communication ports

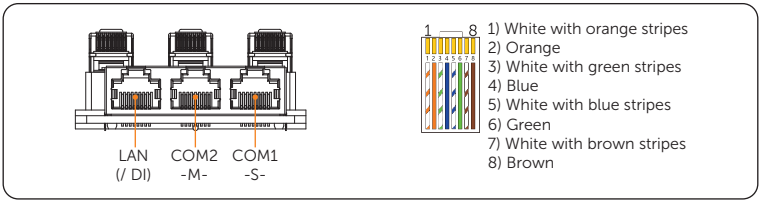

Figure 6-22 Communication ports

Table 6-1 Pin definition of COM1-S-

Pin	1	2	3	4	5	6	7	8
Pin Definition	X	X	X	A1	B1	X	X	X

Table 6-2 Pin definition of COM2-M-

Pin	1	2	3	4	5	6	7	8
Pin Definition	L1_CT+	L1_CT-	L2_CT+	A2	B2	L2_CT-	L3_CT+	L3_CT-

Table 6-3 Pin definition of LAN (/ DI)

Pin	1	2	3	4	5	6	7	8
Pin Definition	TX+	TX-	RX+	DI-1	DI-2	RX-	GND	GND

Note:

1. PIN 3, 6, 7, 8 of COM2-M- is null for single-phase.
2. PIN 1, 2, 3, 6 of LAN (/ DI) are for Ethernet connection, leave the rest pins unconnected when only Ethernet connection is needed.
3. PIN 4, 5, 8 of LAN (/ DI) are for DI signal input connection (only available for EV-Chargers labelled with **DI** on the RJ45 terminal adapter) and can be used to connect external control box.
4. For A1 & B1 and A2 & B2, please refer to below table.

Table 6-4 Explanation for A1 & B1 and A2 & B2

Port	Pin	Single EV-Charger	In parallel connection
COM1 -S-	A1	Connecting inverter, DataHub or other master devices	As secondary EV-Charger
	B1		
COM2 -M-	A2	Connecting meter or other slave devices	As primary EV-Charger
	B2		

NOTICE!

- If the DI signal input connection and the Ethernet (LAN) connection are both needed at the same time, make sure to crimp the cables as required and use the accompanied RJ45 coupler.

NOTICE!

- When powered on after completing the installation, the system will automatically identify the grid data source of the grid side (Priority: Inverter > Meter > CT).

Step 13: Choose and prepare communication cable(s) as the actual application scenario required.

If the cable is self-made, pay attention to pin order of RJ45 terminal and make sure the wires are firmly crimped with the RJ45 terminal (part I).

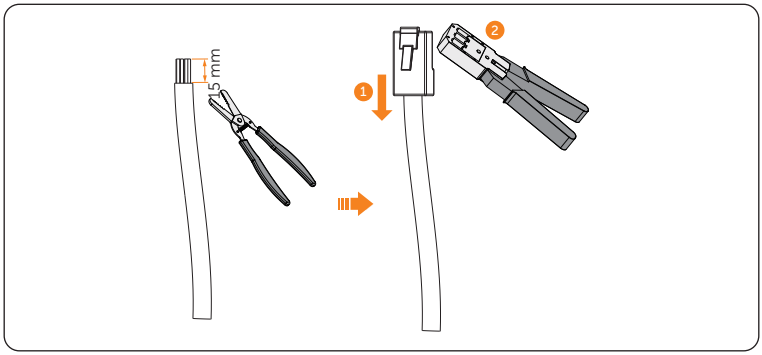

Figure 6-23 Prepare communication cable(s)

Step 14: Loosen the swivel nut of the communication terminal and take out the stopper and the plug(s) as needed.

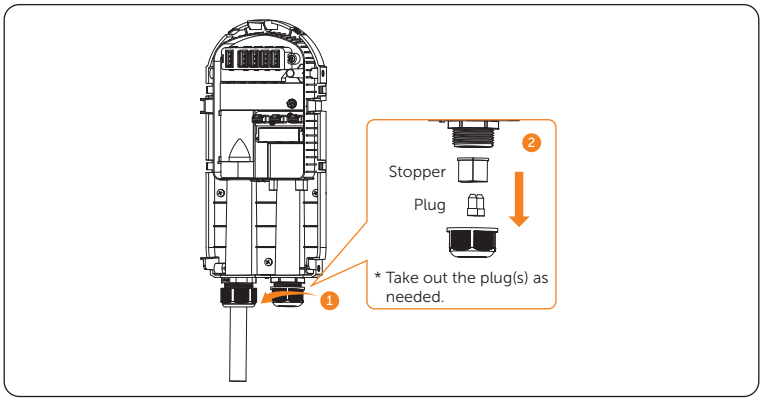

Figure 6-24 Loosen the communication terminal

Step 15: Thread the communication cable(s) through the swivel nut and the opening of the stopper. Make sure the unused hole(s) of the stopper are sealed with the original plug(s). (Take all ports connected as an example from hereupon unless otherwise specified.)

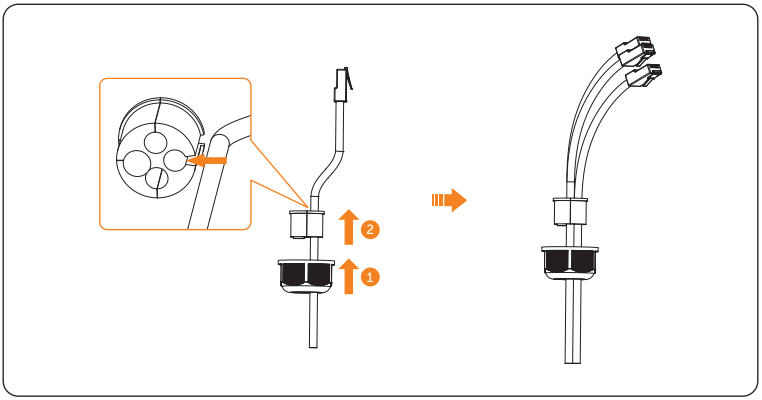

Figure 6-25 Thread communication cable(s)

Step 16: Thread the communication cable(s) through the right channel on the base plate and connect to the corresponding port following the pin definitions according to the actual application scenario.

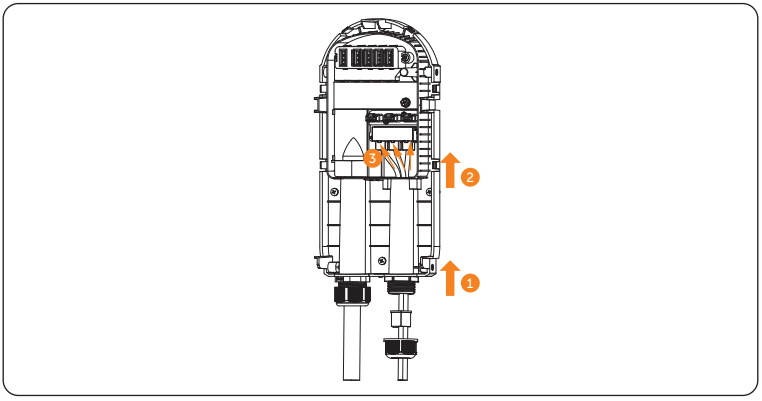

Figure 6-26 Connect communication cable(s) to corresponding port(s)

Step 17: Push up the stopper and swivel nut to an appropriate position and tighten the swivel nut of the communication terminal.

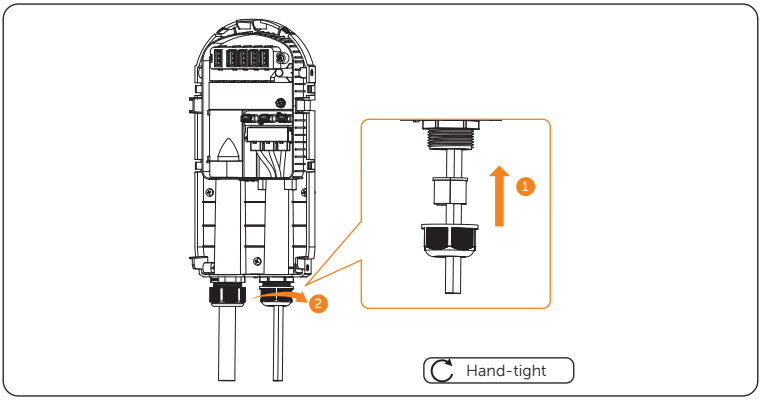

Figure 6-27 Tighten the swivel nut of the communication terminal

Special notice about communication connection

- Communication with inverter

  For inverter side, connect the other end of the communication cable to the COM or RS485 port of the inverter according to the definitions of the communication ports of the specific inverter.

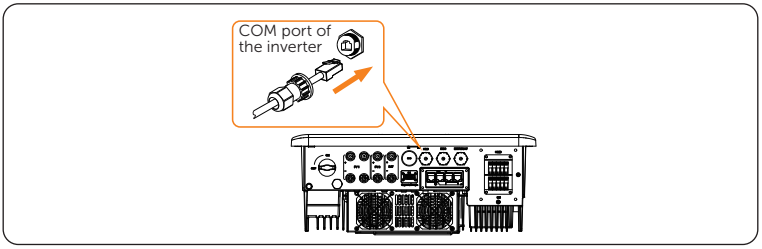

Figure 6-28 Inverter side connection (one example)

NOTICE!

- Refer to the user manual of the inverter for specific cable connection and function settings.

- Communication with CT

  For CT side, steady the CT (part L) on the public grid.

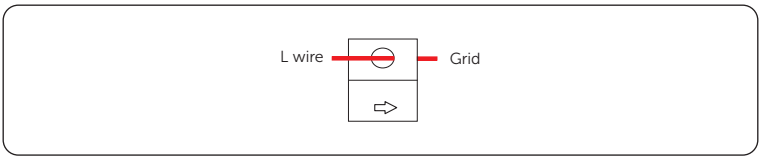

Figure 6-29 CT side connection

NOTICE!

- **The arrow on the CT must point at the public grid.**
- Do not place the CT on the N Wire or the PE wire.
- Do not place the CT on the N and L wire simultaneously.
- Do not place the CT on the non-insulated wires.
- It is recommended to wrap the CT clip around in circles with insulating tape.
- When using the three-phase CT, please clip the CT clamps on the corresponding phases (CT-R must be connected to grid L1, CT-S connected to grid L2, CT-T connected to grid L3).

* If extended communication cable is needed when connecting with CT, use the RJ45 connector (part J) to connect the communication cable connected with the EV-Charger and the other one connected with CT.

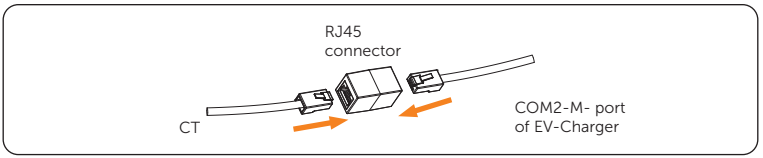

Figure 6-30 Using RJ45 connector

- Communication with meter

  For the installation of meter, please refer to the relative quick installation guide or user manual for details.

- DI signal input connection

  The series EV-Charger supports accepting external DI signal control to limit the output power, thus preventing grid overloads and fulfilling local regulations (for example, § 14a EnWG). It has two DI signal inputs to connect to the external control boxes' corresponding DO signal outputs. If only one DI signal input is needed, connect pin 4 (DI-1) and pin 8 (GND). Once the external control box sends a control command after receiving the grid operator's remote control signal, the EV-Charger will automatically and efficiently limit the output power.

External control box & EV-Charger connection diagram:

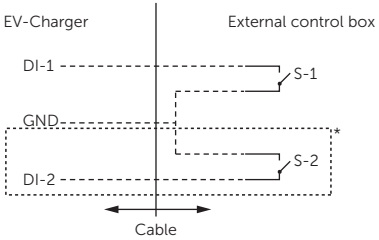

* If only one DI signal input is needed, connect pin 4 (DI-1) and pin 8 (GND).

Figure 6-31 External control box & EV-Charger connection diagram

Control logic:

Table 6-5 Control logic for 14a EnWG Regulation

DI-1	DI-2	Operation
0	0	No limitation
1	0	Limit charging power to 4.2 kW
0	1	Reserved
1	1	Stop charging

Table 6-6 Control logic for egd OPR Regulation

	DI-1	Operation
NO	0	No limitation
	1	Stop charging
NC	0	Stop charging
	1	No limitation

Speical notice:

If the DI signal input connection and the Ethernet (LAN) connection are both needed at the same time, please make sure to crimp pin 1, 2, 3 & 6 for the Ethernet (LAN) cable and pin 4, 5 & 8 for the DI signal input cable, then use the accompanied RJ45 coupler (part K) to assist the connection.

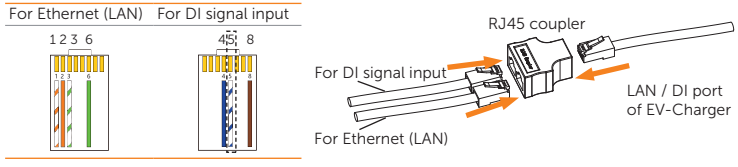

Figure 6-32 Using RJ45 coupler

The related function is disabled by default. If you need to use this function, please set and save **Advanced setting** > **Safety** on the settings page of the App based on your actual need. For details, please refer to "Advanced Setting".

- Communication with Ethernet (LAN)

  Ethernet (LAN) connection is optional for areas where remote Wi-Fi connection is not available or has a weak signal. Users can choose to finish the Ethernet (LAN) connection as needed.

WARNING!

- The Ethernet cable used to connect the EV-Charger for communication must be protected from lightning strikes.

NOTICE!

- Please ensure that the communication cable is intact and correctly connected. Otherwise, some functions may not work properly. For example, in Solar scene if the communication with the inverter is lost, the EV-Charger cannot obtain information about surplus PV power, which will reduce the charging current in Green mode and can only charge at the set charging level in Eco mode.

NOTICE!

- The series EV-Charger is optional with 4G function. If you want to use the 4G function (if available), please install the 4G SIM card before **step 18**. For details, please refer to "15.4 4G Function".

Step 18: Align the body of the EV-Charger with the base plate, pay special attention to align a with a' and b with b' as shown below.

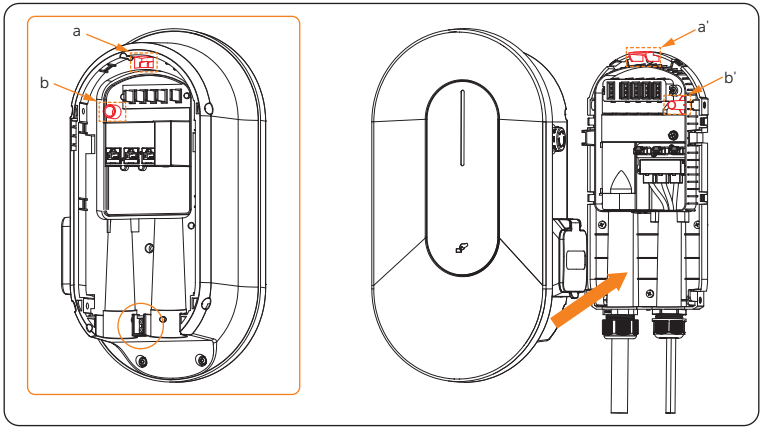

Figure 6-33 Align the body with the base plate

* (Optional) If the user wants to install the padlock for safety reasons, install the anti-theft accessory (b) (part N) and secure it with the ST3.5 screws (part O) before aligning the body with the base plate.

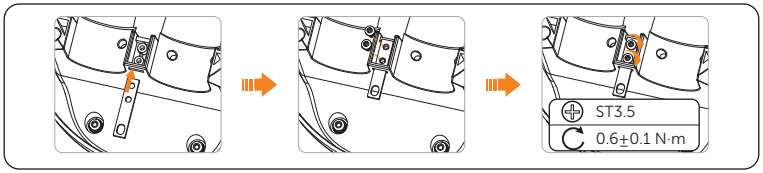

Figure 6-34 Install anti-theft accessory (b)

Step 19: Secure the four M5 screws (part E) on both sides of the body of the EV-Charger with a hexagonal head electric screwdriver.

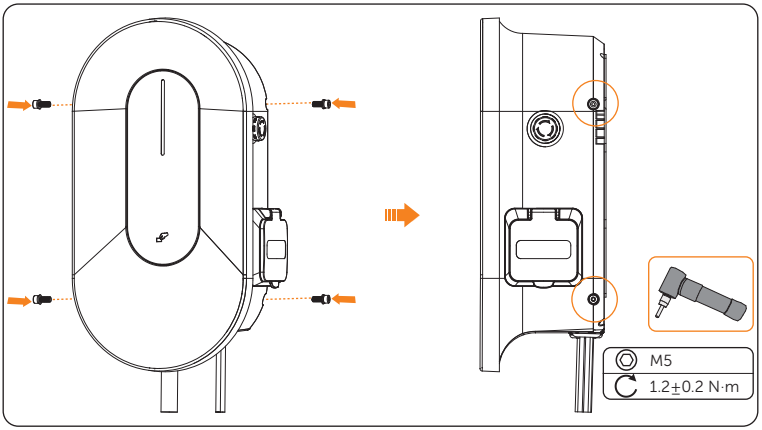

Figure 6-35 Secure the M5 screws

* (Optional) If the user wants to install the padlock for safety reasons, hang the padlock on the anti-theft accessories after fixing the screws. The padlock is not in the scope of delivery. If necessary, prepare a lock with a diameter less than 5.5 mm by yourself, and keep the key to the padlock in a safe place.

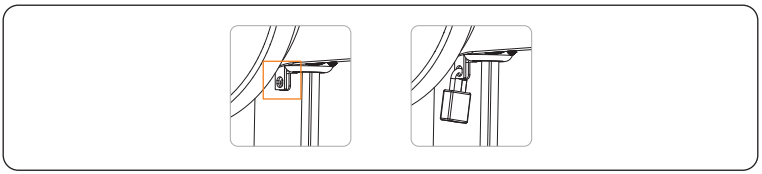

Figure 6-36 Hang the padlock

Step 20: For Plug Type, connect the charging connector with the EV-Charger and hang the connecting cable on the cable hook.

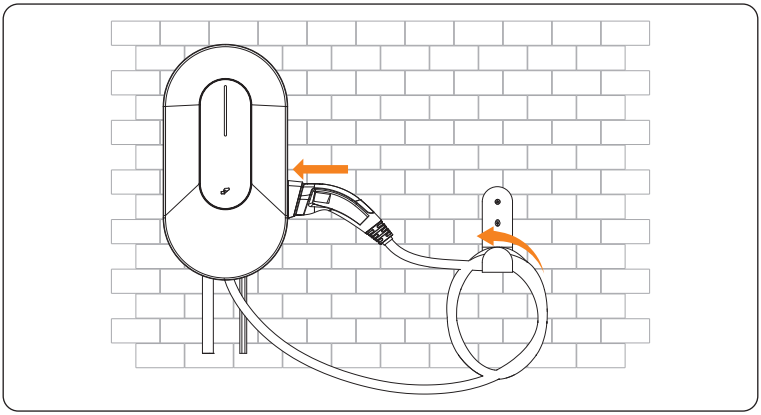

Figure 6-37 Connect the charging connector and hang the cable

7 Power on

7.1 Checking before Powering on

Check all below steps before powering on the EV-Charger:

a. Check that the device is installed correctly and securely;

b. The AC input cable is connected correctly and securely;

c. The communication cables are connected correctly and securely;

d. The voltage, frequency and other factors of the grid are in consistent with the working requirement of the EV-Charger.

7.2 Powering on

Step 1: Turn on the RCBO.

Step 2: Check the status of the LED indicator:

1. When the device is powered on, the buzzer will give a short sound, and the indicator light will be solid or breathing green ("Available" state) after three seconds by default. The EV-Charger has been successfully connected with network server if the indicator light is solid green and it is off-line if the light is breathing green.

2. Then the system will start self-checking automatically. After the checking process, if there is any fault, the indicator light will be solid red ("Faulted" state), please check if it is correctly installed and connected.

3. If it works normally:
   1) When the charging connector is not plugged, the indicator light will be solid or breathing green ("Available" state);
   2) When the charging connector is plugged in but the device is not charging, the indicator light will be solid blue ("Preparing" state);
   3) When the charging connector is plugged in and the device is in charging process, the indicator light will show as the "Charging" state (the colour will be displayed according to the application scene and charging mode and the flowing speed will be determined by the charging power).

WARNING!

- Power to the device must be turned on only after installation work has been completed.
- The device is intended only for charging electric vehicles. Do not charge other devices.

8 App Setting

8.1 Download, Registration and Login

SolaXCloud is an intelligent management platform for home energy, which integrates energy efficiency monitoring, device management, data security communication and other integrated capabilities. While managing your home energy device, it helps you optimize the efficiency of electricity consumption and improve the revenue of power generation.

8.1.1 Downloading and Installing App

Method 1: Scan the QR code below to download the App.

QR codes can also be available on the login page of our official website (www.solaxcloud.com).

Figure 8-1 QR code

Method 2: Search for **SolaXCloud** in App Store or Google Play, and then download the App.

NOTICE!
• The screenshots hereupon are for reference only (mainly based on V7.5.0), and the actual interfaces may differ. You can update your App as needed.

8.1.2 App Registration and Login

Step 1: Run the App and then touch **Don't have an account? Sign up** to create a new account in the App.

Step 2: Follow the instructions and fill in your user name, enter your password, phone number or registration Email address, and enter the verification code to create the account. Log in the App after registration finished.

Step 3: For the first login, complete the plant creation and Wi-Fi configuration as below.

a. Turn to the **Home** page and touch **Create** to create plant.

b. Allow SolaXCloud to access your system location, fill in plant name (self-defined), choose and complete the other settings according to actual situations, then add device by scanning or typing in the Registration No. on the type label.

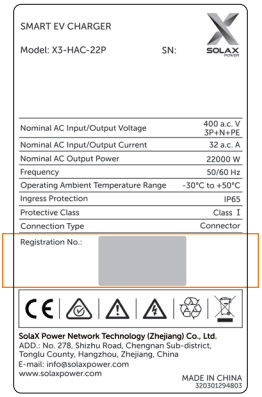

Figure 8-2 One example for Registration No.

c. Enter your WiFi account and password. Start to configure the device network. DHCP is enabled by default to distribute IP address automatically. 5GHz network is not supported.

8.2 Configuration

NOTICE!

- If you already have the App account, you can proceed to the configuration after login.

8.2.1 Add Device

Step 1: Login your account, turn to the **Home** page or the **Device** page of the App and select the exact plant from the plant list on the upper left corner.

Step 2: Touch the ⊕ icon on the upper right corner of the **Device** page, then touch **Add Device** or **Scan**.

Step 3: Follow the instructions to add the EV-Charger and complete the device network configuration.

8.2.2 Wi-Fi Connection

The network configuration will be completed automatically by following the instructions when adding device. If you need to reconnect the network when the device is off-line, please operate as below.

Step 1: Login your account, turn to the **Device** page of the App and select the exact plant from the plant list on the upper left corner.

Step 2: Choose the exact EV-Charger card (off-line with icon) from the **Device** list according to the device type and SN, and touch any part of the card.

Step 3: Touch **Reconfigure** on the pop-up window.

Step 4: Type in or choose your home Wi-Fi Network and password, then touch **Next**.

* 5GHz Wi-Fi is unavailable for now.

Step 5: Follow the instructions to complete Wi-Fi setting, there will be a note when the setting successes.

NOTICE!

- If the Wi-Fi connection fails, users can connect to the Wi-Fi signal named after the device registration number and visit the IP address http://192.168.10.10/ in a browser to configure Wi-Fi. (Account: "admin"; default password: the Registration No.)
- If users connect to the network server through LAN, there is no need to set the Wi-Fi configuration, as it will be automatically configured.

8.2.3 Local Mode

When there is no network, users can access local mode to complete the settings.

Step 1: Use your smart phone to connect the SolaX Wi-Fi signal (Wifi_XCXXXXXXXX).

Step 2: On the login page, you can touch **More** on the upper right corner and then choose **Local Access**.

If you've already logged into your account, access following the path: **Service** > **Application** > **Local Access**.

Step 3: Type in or scan the Registration No. (as the initial password) to access the Local Mode in the App.

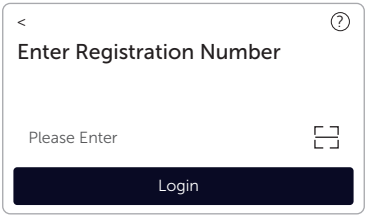

Figure 8-3 Login for local mode

9 Settings for EV-Charger

The function settings for EV-Charger can be done through the details page in the App.

9.1 Introduction of Details Page

Step 1: Login your account, turn to the **Device** page of the App and select the exact plant from the plant list on the upper left corner.

Step 2: Choose the exact EV-Charger card from the **Device** list according to the device type and SN, and touch any part of the card.

Step 3: The **Details** page will be displayed. The page display may differ based on the application scene and charging mode.

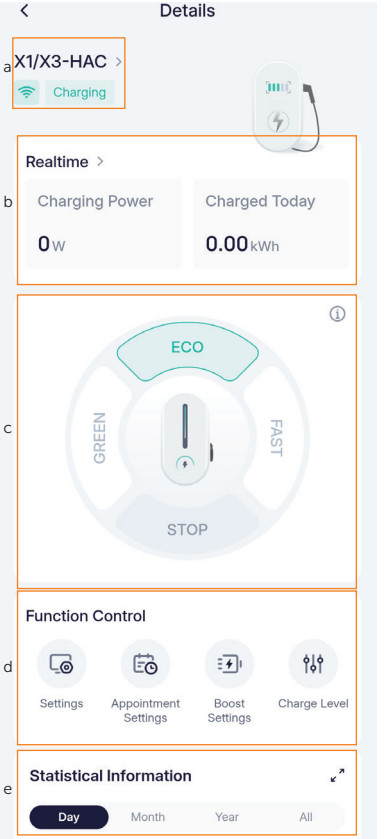

Figure 9-1 Details page

On the **Details** page, you can operate to check the basic information, real time information and the statistics of the EV-Charger as well as to select the charging mode and do other functional settings.

- Part a displays the series name, Wi-Fi connection status and the state of the EV-Charger. Touch part a, you can enter next-level page and review the basic information about the device, which contains the device SN, Registration no. and version information etc. You can also edit the device name or remove the device as needed.
- Part b displays **Realtime** information. Touch part b, you can review more detailed real time data.
- Part c (mode selection) displays differently based on the **Application Scene**.
  - » In Solar Scene, you can touch to switch between Green, Eco and Fast charging modes and stop charging.
  - » In Standard Scene, you can touch to start or stop charging.
  - » In OCPP Scene, this part will be hidden.
- Part d displays the submenus of **Function Control**, which may include **Settings**, **Appointment Settings** (Only display when the activation mode is set as RFID or APP), **Boost Settings** (Only display when charging mode is set as Green and Eco) and **Charge Level**. Touch different items from these, you can do relative settings for the EV-Charger. For details, please refer to "9.2 Overview of the Settings Page" and "10.3 Detailed Function Operation".
- Part e displays **Statistical Information** and **Charging Record**, you can see the energy statistics based on your selection and check the charging records of selected date, which contains information of start time, duration, RFID card number and charging amount.

9.2 Overview of the Settings Page

Touch **Settings** under **Function Control** part of the **Details** page to enter the settings page.

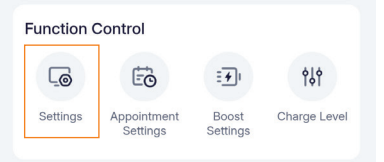

Figure 9-2 Touch to enter the settings page

The settings page contains three parts: **Basic information**, **Charger setting**, **Advanced setting**. Touch on each item can enter to the next level.

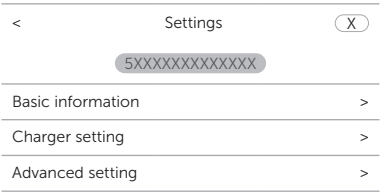

Figure 9-3 Settings page

Basic Information

Enter the **Basic information** page, there are four items displayed: **Charger ID**, **Date Time**, **Time zone** and **Version**.

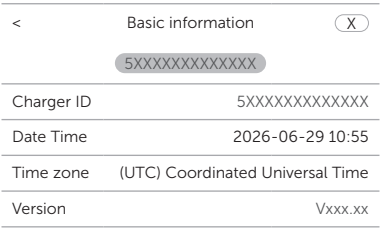

Figure 9-4 Basic information page

Date Time will be automatically synchronized. If it is not correct, please adjust it by yourself.

Confirm the **Time zone** according to the application location. After logging in to the App, the **Time zone** will be automatically located. If it is not correct, please adjust it to the correct one.

Charger Setting

Enter the **Charger setting** page, there are the following items: **Activation mode**, **LED Brightness**, **Dynamic load balance**, **Auto phase-switching** (only for three-phase EV-Chargers), **Modbus Setting**, **cable lock** (only for Socket Type), and **LCD Language** (only for models with LCD screen).

<	Charger setting	X
	5XXXXXXXXXXXXX	
Activation mode		Plug&Charge
LED Brightness		100
Dynamic load balance		Disable
Auto phase-switching		Disable
Modbus Setting		70/9600
cable lock		Disable
LCD Language		English

Figure 9-5 Charger setting page (one example)

For **Activation Mode**, please refer to "10.1 Activation Mode Setting".

With **LED Brightness**, you can set the brightness of the LED indicator. When **Close** is selected, the LED indicator will not light up. The higher the value set, the brighter it is.

The **cable lock** function will only take effect for Socket Type. The charging cable can be permanently locked by enabling this function to prevent it from being pulled out or lost.

LCD Language is only for models with LCD screen, you can select the language type according to actual needs.

The other settings on this page by default will be shown and take effect in Solar scene and Standard scene. For details, refer to "10.3 Detailed Function Operation".

Advanced Setting

There may be the following items: **Safety**, **Application scene**, **Charging phase**, **Three phase imbalance**, **Parallel Setting**, **Random charging delay**, **Grid type**, **CT Direction**, **Charging Restrict**, **Alarm setting**, **Restore factory settings**, **EV Charger Reset** and **Network**.
Among these items, **Charging phase** and **Three phase imbalance** are only for single-phase EV-Chargers.

<	Advanced setting	X
	5XXXXXXXXXXXXX	
Safety		None
Application scene		Solar
Charging phase		L1
Three phase imbalance		Disable
Parallel Setting		Disable
Random charging delay		Disable
Grid type		TN
CT Direction		Positive
Charging Restrict		>
Alarm setting		265/160 v
Restore factory settings		Save
EV Charger Reset		Save
Network		v

Figure 9-6 Advanced setting page (one example)

The default setting for **Safety** is **None**. You can set according to your needs (for example, you need to enable the DI signal input function), please select the correct item from the list and confirm the selection.

Cancel	Confirm
None	
14a EnWG Regulation (Germany)	
TOR R37 Regulation (Austria)	
egd OPR Regulation (Czech)	

Figure 9-7 Setting for Safety

- When **TOR R37 Regulation** is selected, the specific configuration should be done by professionals. For details, please refer to "15.5 Configuration for TOR R37 Regulation".
- When **egd OPR Regulation** is selected, a new setting item **Contact Config** will appear. You can choose between normally open (**NO: closed-trigger**) or normally

closed (**NC: opened-trigger**) dry nodes based on the installation wiring.

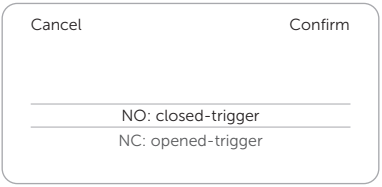

Figure 9-8 Contact Config for egd OPR Regulation

The default **Application scene** is **Solar**, if you want to use OCPP scene or Standard scene, please refer to "10.2 Application Scene Setting".

The default setting for **Parallel Setting** is **Disable**, if you want to use the parallel function, please refer to "15.2 Parallel Function".

The default setting for **CT Direction** is **Positive**. When the CT is in reverse connection (of all phases), you can select **Negative** to enable the CT to work normally.

The **Alarm setting** contains **OverVoltage** and **LowVoltage**. Set and save these two limit values according to local regulations.

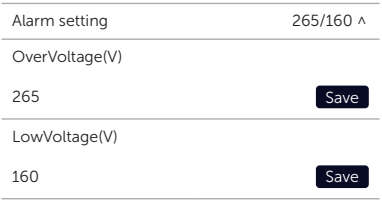

Figure 9-9 Alarm setting

The default settings can be restored by touch **Save** for **Restore factory settings**.

The EV-Charger can be reset and the LED status indicator light will be green when touch **Save** for **EV Charger Reset**.

The **Local Access** under **Network** will be automatically turned off one hour after successful network connection for the consideration of security. If you want to access the WiFi signal named after the Registration No. of the EV-Charger, enable this setting to turn on the signal.

For the detailed operation of other function settings, please refer to "10.3 Detailed Function Operation".

10 Operation Method

10.1 Activation Mode Setting

The EV-Charger has three activation modes in total, namely plug & charge, card-swiping, and APP activation. There is a built-in electronic lock in Socket Type and there is no electronic lock for Plug Type.

Solar scene / Standard scene

In Solar scene and Standard scene, all the three activation modes are available and the default mode is plug & charge. If you want to switch to the card-swiping mode or APP activation mode from the default mode, you need to select **RFID** or **APP** for **Activation mode** on the settings page of the App following the path: **Charger setting** > **Activation mode** > **RFID**/**APP**.

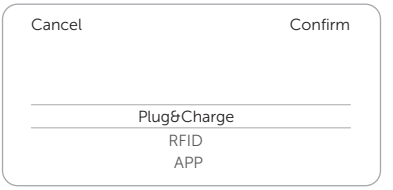

Figure 10-1 Select activation mode

- Plug & charge mode

  For Socket Type, the electronic lock will be locked when the EV-Charger starts charging and unlocked automatically when the charging stops.

- Card-swiping mode and APP activation mode

  For Socket Type, the electronic lock will be locked when the EV-Charger starts charging after swiping the card or touch corresponding charging mode area in the App. If the charging process is stopped by the user (either by swiping card or touch **STOP** in the App), the electronic lock will be unlocked automatically. If the charging process is completed (i.e. the EV is fully charged), the electronic lock should be unlocked by swiping the card.

OCPP scene

In OCPP scene, please refer to the operation guide of the OCPP server.

NOTICE!
• The RFID card (part P) from the accessory bag will be invalid in OCPP scene.

NOTICE!

- In emergency cases, please stop the EV-Charger by pressing the EMERGENCY STOP button (if it has).

NOTICE!

- Before charging, please check whether the EV-Charger and the charging connector are in normal state.
- During the charging process, do not unplug the charging connector directly, STOP charging first.
- After charging stopped, disconnect the charging connector from the electric vehicle first.

10.2 Application Scene Setting

The default **Application scene** is **Solar**. If you want to use the Standard scene or OCPP scene, select on the settings page following the path: **Advanced setting** > **Application scene** > **Standard**/**OCPP**.

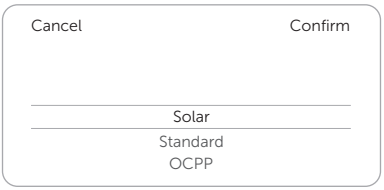

Figure 10-2 Select Application scene

Standard scene

In Standard scene, the EV-Charger will operate as a standard charger which just operate the start and stop charging. No Green or Eco mode in this scene. The mode selection part on **Details** page in Standard scene will be shown as below. You can start and stop charging by touching the corresponding button.

Figure 10-3 Mode selection part for Standard scene

OCPP scene

In OCPP scene, the EV-Charger can be connected with the OCPP server and be managed and controlled through the App or web of the corresponding OCPP server. Before choosing this scene, please ensure that the EV-Charger has met the following prerequisites:

- The EV-Charger has joined the network that can access the Internet through network connection.
- A valid "URL" address has been obtained from the OCPP server.

  A valid "URL" address usually starts with "ws://" or "wss://". For example, ws://xxxxxx.com:8080/ChargeCentralSystem/CPXXXXXXX or wss://xxxxxx.com/ChargeCentralSystem/CPXXXXXX.

  For more details, please consult with the seller or the OCPP server.
- A valid charger ID has been obtained from the OCPP server.
- The network is normal and the OCPP server can be connected.

NOTICE!

- Only with a valid address and a valid charger ID obtained from the OCPP server, can the EV-Charger be connected to the OCPP server through the Internet and access the various functions provided by the server.

After **OCPP** scene is selected, enter the **Charger setting** page. Then type in the **OCPP Server** address and **Charger ID** obtained from the OCPP server and touch **Save**. A **Setting successful** notice will appear when saved successfully.

For models with LCD screen, users can also define the QR code displayed by setting and saving the information in **LCD QR Code** item.

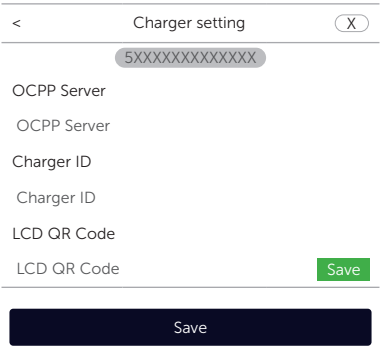

Figure 10-4 OCPP scene setting

10.3 Detailed Function Operation

10.3.1 Charging modes in Solar Scene

When **Solar** scene is selected, there are three charging modes (Green, Eco & Fast) and two kinds of boost settings available (Smart Boost & Timer Boost).

The default charging mode is Fast mode, and you can switch among the charging modes by touching corresponding area of the mode selection part on the **Details** page of the App. The boost settings will only take effect in Green and Eco modes.

Green mode

In Green mode, the EV-Charger will maximize the use of surplus power generated from the inverter. The EV-Charger should be connected with the inverter or CT/meter to obtain the power information, so as to control the charging power in real time. According to the minimum start-up charging power, the charging current can be divided into two levels as 3 A and 6 A. The default level is 3 A.

In the 6 A level, the EV-Charger won't use the power generated from grid at all.

In the 3 A level, the EV-Charger would start charging only when surplus photovoltaic power supply is more than 3 A. Meanwhile, if the surplus photovoltaic power supply is less than 6 A, the EV-Charger needs to buy extra electricity from grid for minimum start-up charging power (Single-phase EV-Charger: 1.4 kW, Three-phase EV-Charger: 4.2 kW when auto-phase switching is disabled and 1.4 kW when enabled).

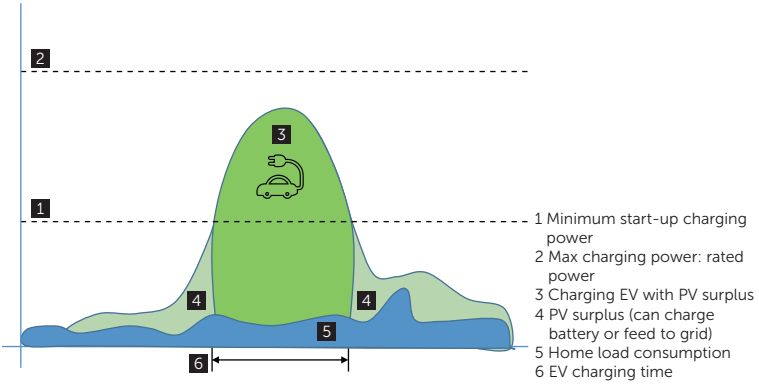

Figure 10-5 Green mode

You can set the charging current level for Green mode in the App following the path: the **Details** page > **Function Control** > **Charge Level** > **Green Mode**.

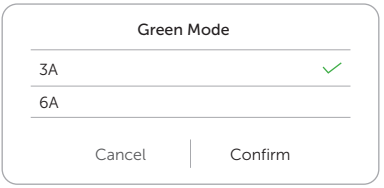

Figure 10-6 Charging current level for Green mode

Eco mode

In Eco mode, the charging power is continuously adjusted according to changes in generation or power consumption elsewhere in the house, thereby minimizing the use of the grid power. In this mode, users can set charging current at five different levels at most, i.e., 6 A, 10 A, 16 A, 20 A, and 25 A (Only 6 A and 10 A for 11 kW models; 6 A, 10 A, and 16 A for 4.6 kW models). When the available surplus photovoltaic power is not less than the charging power required by the set level, the EV-Charger will charge with the actual available surplus photovoltaic power. If at any time the available surplus power falls below the charging power required by the set level, the shortfall will be drawn from the grid.

For example, a single-phase EV-Charger is set at 10 A level (2.3 kW), if the available surplus photovoltaic power is only 8 A (1.84 kW), then the insufficient 2 A (0.46 kW) will be taken from the grid. For another example, a three-phase EV-Charger is set at 10 A level (6.9 kW), if the available surplus photovoltaic power is only 3×8 A (5.52 kW), then the insufficient 3× 2 A (1.38 kW) will be taken from the grid.

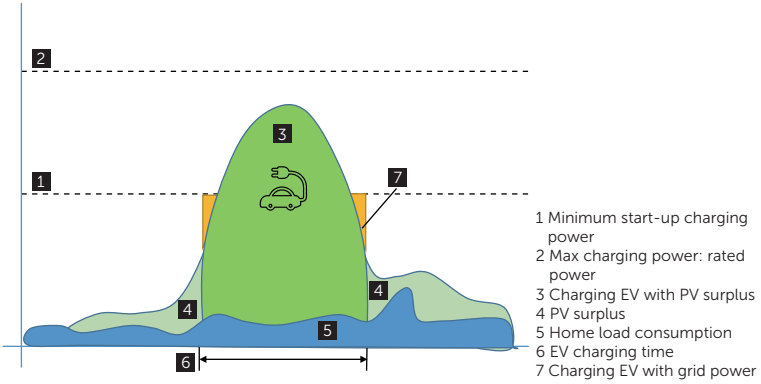

Figure 10-7 Eco mode

You can set the charging current level for Eco mode in the App following the path: the **Details** page > **Function Control** > **Charge Level** > **Eco Mode**.

Figure 10-8 Charging current level for Eco mode

NOTICE!

When the EV-Charger is charging in Green or Eco mode:

- The charging electric vehicle must comply with the IEC61851 standard, otherwise the EV-Charger won't work.
- If there is a zero injection requirement for the system, the EV-Charger must communicate with the inverter in order to charge normally.

Fast mode

In Fast mode, the EV-Charger will charge the EV at the rated output power regardless of whether the surplus photovoltaic power is sufficient. The actual charging power depends on the SOC of the battery pack of the EV.

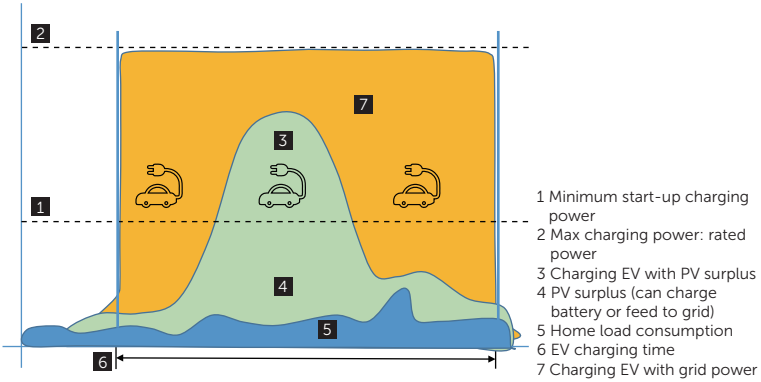

Figure 10-9 Fast mode

10.3.2 Boost Settings in Solar Scene

NOTICE!

- The boost settings will only take effect under Green and Eco modes.
- The boost settings can only be set during the charging process.
- Smart Boost and Timer Boost cannot take effect at the same time.

The boost settings can be done on the **Details** page > **Function Control** > **Boost Settings**, please follow the instructions hereafter.

Smart Boost

Before using the Smart Boost function, complete the settings as below:

a. Touch **Boost Settings** under **Function Control** part to enter next level.

b. Enable **Boost Settings** by touch the switch on the this new page.

c. Select and confirm **Smart Boost** for **Boost**.

d. Set the desired **Charging amount** (kWh) and **Stop time** for the vehicle charging, then **Save** the settings.

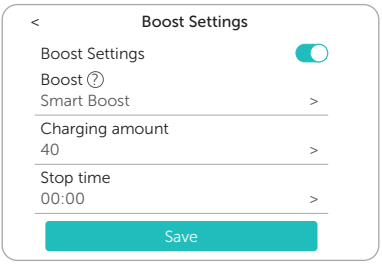

Figure 10-10 Smart Boost settings

The EV-Charger will complete the charging of the EV with desired energy before the preset end time at maximum charging power and will use the photovoltaic power supply as much as possible and minimize the use of the grid power. (E.g.: The user needs to charge the EV to 40 kWh before 10:00 a.m. and completes the settings, the EV-Charger will charge the EV to 40 kWh before 10:00 a.m., after this desired energy and/or the time has reached, the charging power will be depended on the surplus power generated by the inverter if the charging process has not been completed.)

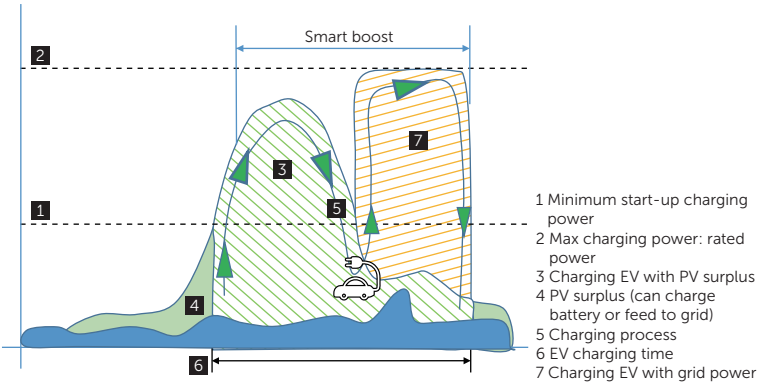

Figure 10-11 Smart Boost

Timer Boost

Before using the Timer Boost function, complete the settings as below:

a. Touch **Boost Settings** under **Function Control** part to enter next level.

b. Enable **Boost Settings** by touch the switch on the this new page.

c. Select and confirm **Timer Boost** for **Boost**.

d. Set the desired **Start time** and **Stop time** for the vehicle charging, then **Save** the settings.

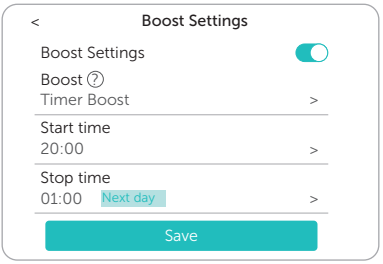

Figure 10-12 Timer Boost settings

When using Eco or Green modes, the EV-Charger can be programmed to "boost" the current charge in a certain period. During the set boost period, the charging rate will adjust to maximum (just like Fast mode), regardless of the amount of available surplus photovoltaic power. This means that the power may be drawn from the mains grid supply during boost times. If the EV is fully charged, the EV-Charger will stop charging.

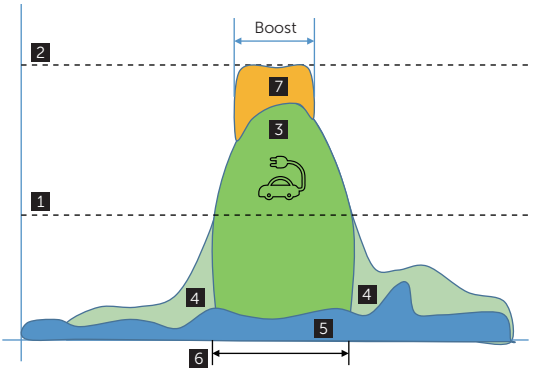

1 Minimum start-up charging power
2 Max charging power: rated power
3 Charging EV with PV surplus
4 PV surplus (can charge battery or feed to grid)
5 Home load consumption
6 EV charging time
7 Charging EV with grid power

Figure 10-13 Timer Boost

10.3.3 Dynamic Load Balance

The EV-Charger has dynamic load balancing function. During the charging period, no matter in which charging mode, the total power of the house will not exceed the main grid capacity. To ensure that the total power of the house doesn't exceed the grid capacity, the charging power will be adjusted in real time according to the total load power.

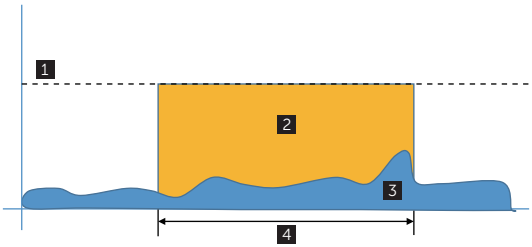

1 Main breaker limit
2 Charging power of the EV-Charger
3 Other home load
4 EV charging time

Figure 10-14 Dynamic load balance

If you want to use this function, touch **Dynamic load balance** on the settings page following the path: **Charger setting** > **Dynamic load balance**, enable and set the value for it, then confirm the settings.

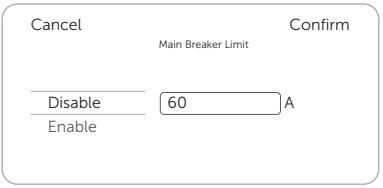

Figure 10-15 Dynamic load balance setting

With the dynamic load balance function, when the power consumption approaches the preset maximum value, the EV-Charger will reduce the charging power so that the main breaker current will reduce to the preset value minus 5 A, thus avoiding the situation of main breaker trip due to overload.

NOTICE!

- The EV-Charger should be connected with a matched inverter, CT or meter to obtain the grid data for the dynamic load balance function to work normally. Otherwise, the function won't take effect.

NOTICE!

- With the dynamic load balance function enabled, when the EV-Charger reduces the charging power or suspends charging, a **Grid Limit** message will appear under the state of the EV-Charger on the **Details** page.

10.3.4 Auto Phase-Switching

This function is only available for three-phase EV-Chargers and only takes effect in Green mode in Solar scene. When the surplus PV power is not sufficient for the minimum start-up charging power for three-phase charging but is sufficient for the minimum start-up charging power for single-phase charging, the EV-Charger can switch to single-phase mode charging automatically to make full use of the PV power if this function is enabled. This function is disabled by default (Switching to single-phase mode is not allowed).
You can select **Enable** to allow conversion to single-phase mode on the settings page following the path: **Charger setting** > **Auto phase-switching**.

Figure 10-16 Auto phase-switching setting

10.3.5 Modbus Setting

If the EV-Charger was to communicate with other devices except CT or meter and the user needed to do Modbus setting according to the actual application, it could be done on the settings page following the path: **Charger setting** > **Modbus Setting**.

ModBus485 Address: The default value is 70. The addresses of different EV-Chargers in the same one system should be different; with an exception that when used in parallel, the primary EV-Charger should be set as 70 and the secondary EV-Chargers should be set starting from 70.

ModBus485 Baud Rate: The default value is 9600. The baud rate should be set according to the devices with which the EV-Charger is working.

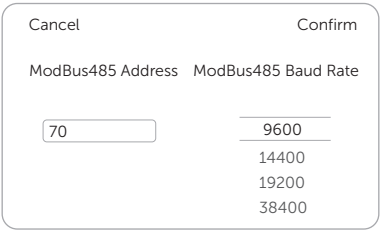

Figure 10-17 Modbus setting

10.3.6 Charging Phase

This function is only available for single-phase EV-Chargers. When single-phase EV-Charger is installed in a three-phase power grid system, the charging phase should be correctly set based on the actual installation situation. You can set after consulting with the technical electrician following the path on the settings page: **Advanced setting** > **Charging phase**.

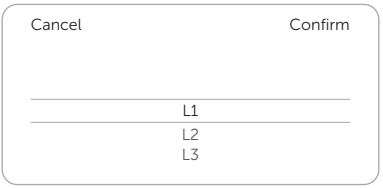

Figure 10-18 Charging phase setting

10.3.7 Three-phase Imbalance

This function is only available for single-phase EV-Chargers. In some countries, there are some special regulations that the power differences between the phases must not be bigger than 4.6 kW or 3.7 kW. Therefore, when using single-phase EV-Chargers, the charging power must be limited. (This setting item is not available for three-phase EV-Chargers.) If required by local regulations, please enable this function on the settings page

following the path: **Advanced setting** > **Three phase imbalance** and complete the relative settings:

1) Set the value for **unbalanced_power** (W) according to local regulations. The default value is 4600.

2) Select **Enable** for the **unbalanced_switch** and **Save** the settings.

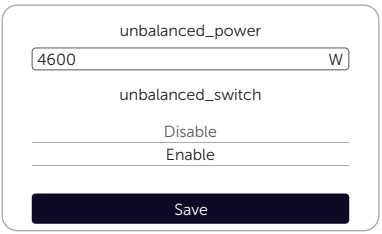

Figure 10-19 Three phase imbalance setting

NOTICE!

- To achieve the three phase imbalance function, the single-phase EV-Charger should be connected with a three-phase meter or communicate with an inverter. If achieved by communicating with an inverter, the inverter must be connected with a three-phase meter or three-phase CT.

10.3.8 Random Charging Delay

The start charging time for the vehicle can be delayed randomly with the random charging delay function. If choose to enable it, input the charging delay time (s) within a range of 600 s ~ 1800 s. This function is disabled by default. If needed, you can enable it following the path on the settings page: **Advanced setting** > **Random charging delay**.

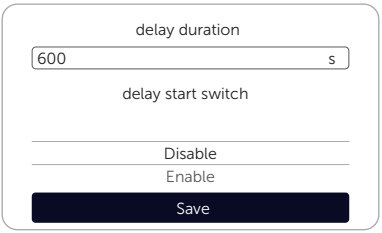

Figure 10-20 Random charging delay setting

10.3.9 Grid Type Setting

The EV-Chargers support different grid systems, the grid type should be set correctly according to the actual situation. You can set and check on the settings page following the path: **Advanced setting** > **Grid type**, the default setting is **TN**.

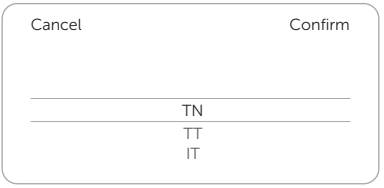

Figure 10-21 Grid type setting

10.3.10 Charging Restrict

At most six time periods can be set here, and for each period you can set its repeat times. At these preset time periods, the EV-Charger will not be available for charging (**ban**).

a. Touch **Charging Restrict** following the path on settings page: **Advanced setting** > **Charging Restrict**.

b. After entering the **Charging Restrict** page, the existed list will appear. You can choose certain time period(s) and turn on or off the switch as shown.

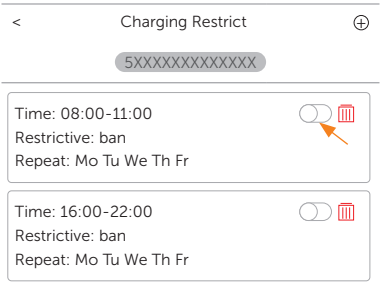

Figure 10-22 Charging restrict list

c. If you want to add a new period, touch the ⊕ icon on the upper right corner and complete relative settings.

1) Enable or disable the **Restrictive Activation** for a certain period.

2) The **Restrictive Type** is **ban** by default which means charging is not allowed at this period.

3) Set the repeat frequency by ticking the days (Multiple choices are possible).

4) Set the **Start time** and **End time** of the period.

5) Touch **Save** to confirm the settings.

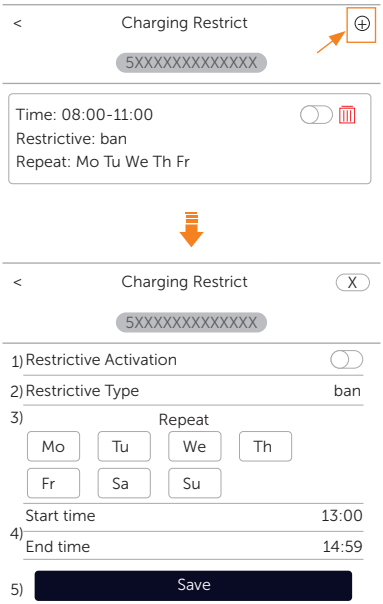

Figure 10-23 Setting a new charging restrict period

d. If you want to revise the settings for a certain period, touch the content box of the period and then update the setting items.

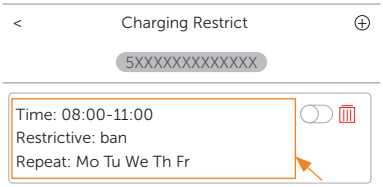

Figure 10-24 Touch to revise

e. If you want to delete a certain period, touch the delete icon and select **Confirm** in the pop-up window to confirm.

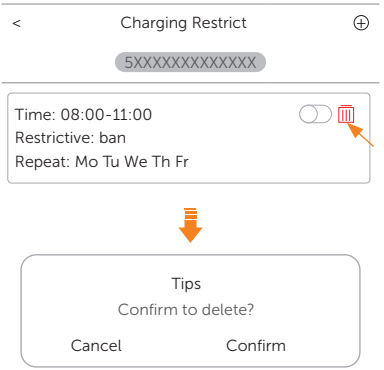

Figure 10-25 Touch to delete

10.3.11 Maximum Charging Current

You can set the maximum charging current for the EV-Charger based on actual need.

Setting path: the **Details** page > **Function Control** > **Charge Level** > **Max Charging Current** and adjust the value for maximum charging current.

The setting range is shown in below table.

Table 10-1 Setting range for maximum charging current

Models	4.6 kW	7.4 kW	11 kW	22 kW
Setting range	6 A to 20 A	6 A to 32 A	6 A to 16 A	6 A to 32 A

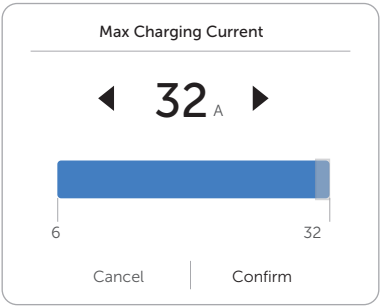

Figure 10-26 Setting maximum charging current

10.3.12 Schedule Charging Setting

NOTICE!

- When the schedule charging setting function is enabled, the plug & charge activation mode will be invalid immediately. If the user wants to charge the EV immediately on the spot, the **Activation mode** must be selected as **APP/RFID** to start charging on the settings page following the path: **Charger setting** > **Activation mode** > **APP/RFID**.

In Solar scene and Standard scene, users can set schedule charging at some specific time period as scheduled according to the electricity price of different periods or their household load to save the electricity cost. At most four periods can be set here. This function could be set via the **Details** page.

a. Touch **Appointment Settings** under **Function Control** part of the **Details** page.

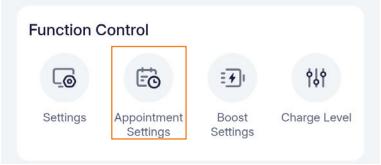

Figure 10-27 Touch Appointment Settings

b. Touch **Create** (for the first time) or **Add** (to set more periods) on the **Appointment Settings** page.

c. Four items (**Start Time**, **Stop Time**, **Repeat** and **Charging Current**) can be set here. Touch each item to set the desired value and confirm.

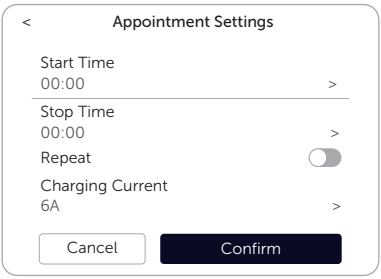

Figure 10-28 Set the items and confirm

» **Start Time**: Time to start charging

» **Stop Time**: Time to stop charging, can be set to a time of the next day

» **Repeat**: Set the effective frequency. If it is kept disabled by default, the period setting would effect only once. If you want to repeat several times, please enable it and touch the newly appeared **Repeat**, then select from Monday to Sunday (multiple choices are allowed) and confirm the setting.

» **Charging Current**: The maximum charging current of the scheduled

charging period. The range is 6 A to 20 A for 4.6 kW model, 6 A to 32 A for 7.4 kW and 22 kW models, 6 A to 16 A for 11 kW models.

d. After the addition is completed, it will be displayed on the list. Touch the switch as shown to enable the setting.

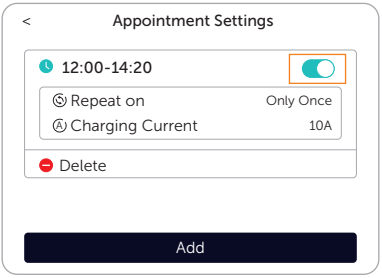

Figure 10-29 Enable the schedule charging period

e. If you want to revise the settings for a certain period, touch the middle part of the content box of the period and then edit the setting items.

f. If you want to delete a certain period, touch ⊖ icon in the lower part of the content box and select **Confirm** in the prompt window to confirm.

NOTICE!

- For the charging current, the value set for dynamic load balance has a higher priority.
- During the schedule charging period, the charging process can be stopped by the App.

11 Screen Display

NOTICE!

- The screen is optional, only models named with "L" have LCD screen.
- The screen will display the information of the EV-Charger.
- The screen is for display only and not available for setting.

All screen pictures in this section are for illustrative purposes only.

11.1 Description of Icons on the Screen

From the screen, users can get information about the EV-Charger, including its basic information, various connection status and charging information or operation tips. The following figure takes a screen picture of available state of a Socket Type EV-Charger as an example.

Figure 11-1 Screen display (One example)

Table 11-1 Descriptions of icons and information on the screen

No.	Item	Icon	Description	Remark
1	Grid data source	CT	Data source from external CT	Grid data source from external CT in above figure.
		INV	Data source from inverter	
		EM	Data source from external meter	
2	LAN connection status		Connected with LAN	The EV-Charger is not connected with LAN in above figure.
			Not connected with LAN	

No.	Item	Icon	Description	Remark
3	Server connection status		Connected with server	The EV-Charger is not connected with any server in above figure. In Solar scene and Standard scene, it indicates the connection status with SolaXCloud. In OCPP scene, it indicates the connection status with the OCPP server.
			Not connected with server	
4	Electronic lock status		Locked	Only for Socket Type. The electronic lock of the EV-Charger is unlocked in above figure.
			Unlocked	
5	4G connection status	4G	Connected with 4G	Only for EV-Chargers with 4G function. The EV-Charger is not connected with 4G in above figure.
		4G	Not connected with 4G	
6	WiFi connection status		Connected with WiFi (Strong signal)	The EV-Charger is not connected with WiFi in above figure.
			Connected with WiFi (Medium signal)	
			Connected with WiFi (Weak signal)	
			Not connected with WiFi	
7	Time	/	Current time (hh:mm)	It is 09:24 in above figure.
8	Device number	/	The unique number of the device.	In Solar scene and Standard scene, it displays the SN of the EV-Charger. In OCPP scene, it displays the charger ID obtained from the OCPP server. The SN of the device (50207100000000) is displayed in above figure.
9	Version number	VX.XX_ X.X	Firmware version _ Display version	Firmware version is V4.31, display version is V1.0 in above figure.
10	Charging information or operation tips	Based on various status	Display the information of current status and operation tips	Offer a tip to connect the charging connector in above figure.

11.2 Description of Status Screen

In different states, the screen will display different information or operation tips. Below table gives examples and brief explanations in different states.

Table 11-2 Descriptions of status screen

No.	Status	Screen Picture	Description	Remark
1	Power on	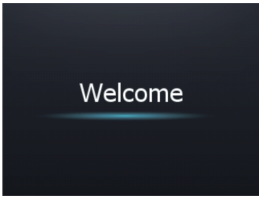	/	The first interface displayed after the device is powered on or restarted.
2	Available		/	Prompt the user to plug the charging connector to the EV. The interface has an animated effect with arrows pointing to the EV.
3	Preparing	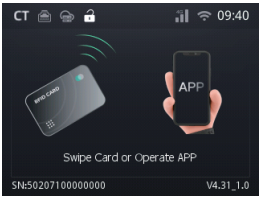	In Solar scene and Standard scene and the activation mode is RFID	Prompt the user to swipe card or operate the App to start charging.
		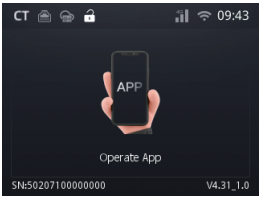	In Solar scene and Standard scene and the activation mode is APP	Prompt the user to operate the App to start charging. This interface may also displayed if the EV is not ready when the activation mode is plug & charge.
		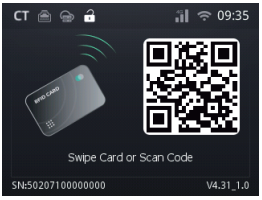	In OCPP scene only	Prompt the user to swipe card or scan the QR code to start charging.

No.	Status	Screen Picture	Description	Remark
4	Authentication result	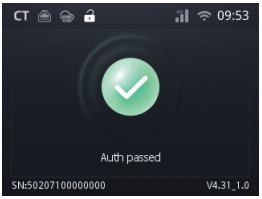	Authorisation passed. Only display for a short time.	1. Start charging: If the EV is not ready the screen will display as "Preparing" status; if the EV is ready, the screen will jump to "Charging" status. 2. Stop charging: The charging will be stopped when passed.
		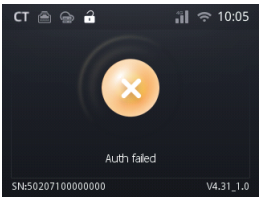	Authorisation failed.	The card is illegal, not activated or not matched.
5	StartDelay	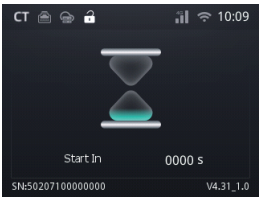	Random start delay countdown	Only displayed when the random charging delay function is enabled and the charging will start after the countdown ends.
6	Scheduled	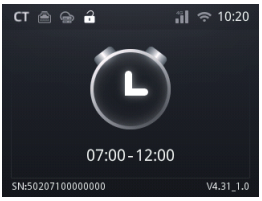	Display the next schedule charging period of the day (including start time and end time)	Only displayed when the charging connector is plugged to the EV. If the schedule period has been reached but the EV is not ready then the screen will display as "Preparing" status; if the EV is ready, the device will start charging.

No.	Status	Screen Picture	Description	Remark
7	Charging	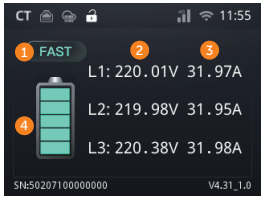	During the charging process, these two interfaces will switch back and forth.	1: Charging mode (Fast, Green or Eco for Solar scene, Fast for Standard and OCPP scene. 2: Phase voltage (different phases for three-phase) 3: Phase current (charging current, different phases for three-phase) 4: Animation of the charging process
		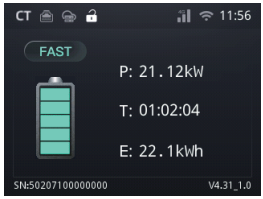		P: Charging power T: Charging time E: Charging energy
8	ChargPause	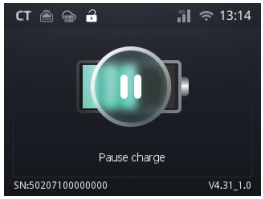	The charging process is paused.	Possible reasons: 1. Insufficient photovoltaic power supply; 2. Auto phase-switching, the charging process will pause for 1 minute and then restart charging; 3. In the charging restrict period of ban; 4. Paused due to dynamic load balance.

No.	Status	Screen Picture	Description	Remark
9	Finish	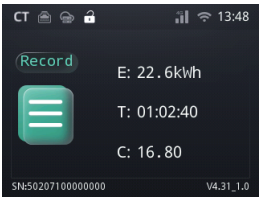	When the charging finished, these two interfaces will switch back and forth.	Display the charging record. E: Charging energy T: Charging time C: Cost
		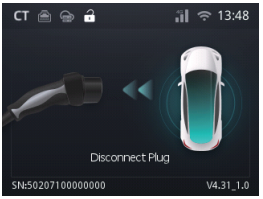		Prompt the user to unplug the charging connector from the EV. The interface has an animated effect with arrows pointing to the charging connector.
10	Unavailable	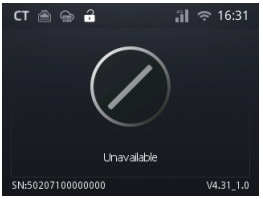	The EV-Charger is not available for usage.	Only displayed in OCPP scene.
11	Faulted	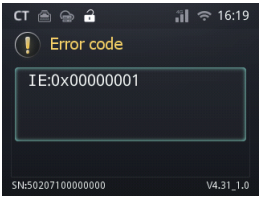	The error code will be displayed when fault occurs.	Check the error code and try the solutions provided in "12.2 Troubleshooting", and contact with the service group if necessary.
12	Update	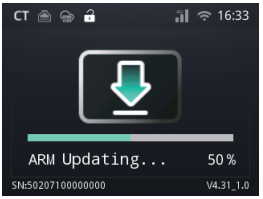	Display the status of upgrade.	Display the progress, type, status and percentage of the upgrading.

12 Troubleshooting and Maintenance

12.1 Power off

Turn off the RCBO.

WARNING!

- After the EV-Charger is powered off, there may still be the residual electricity and heat which may cause electric shocks and body burns. Please wear personal protective equipment (PPE) and start maintaining the EV-Charger at least five minutes after power off.

12.2 Troubleshooting

This section lists the possible problems with the EV-Charger, and provides information and procedures for identifying and resolving them. In case of any errors, check for the warnings or error messages on the front panel (if it has a screen) or App, and then refer to the suggestions below. For further assistance, contact SolaX Customer Service. Please provide the model and SN of the EV-Charger, and be prepared to describe the system installation details.

Table 12-1 Troubleshooting list

Error Code	Fault	Diagnosis and Solutions
IE:0x00000001	EmStop_Fault	Emergency stop fault. • Release the Emergency stop button. • Contact SolaX for help.
IE:0x00000002	OverCurr_Fault	Overcurrent fault. • Wait for a while to check if it is back to normal. If yes, re-plug in and try charging the EV again. • Contact SolaX for help.
IE:0x00000004	OverTemp_Fault	Temperature beyond limit. • Wait for a while to check if it is back to normal. If yes, re-plug in and try charging the EV again. • If not, confirm that the conditions for installation are proper and waiting for cooling down, then re-plug in and try charging the EV again. • Contact SolaX for help.

Error Code	Fault	Diagnosis and Solutions
IE:0x00000008	PEGround_Fault	PE grounding fault. • Confirm that the EV-Charger is reliably grounded. • Wait for a while to check if it is back to normal. If yes, re-plug in and try charging the EV again. • Contact SolaX for help.
IE:0x00000010	OverLeakCurr_Fault	6 mA leakage current fault. • Unplug the charging connector from the EV and check whether the EV is leaking. • Contact SolaX for help.
IE:0x00000020	PELeakCurr_Fault	PE leakage current fault. • Unplug the charging connector from the EV, if it is back to normal, re-plug in and try charging the EV again. • Contact SolaX for help.
IE:0x00000040	OverLoad_Fault	Over power fault. • Wait for a while to check if it is back to normal. If yes, re-plug in and try charging the EV again. • Contact SolaX for help.
IE:0x00000100	OverVoltL1_Fault	L1 phase overvoltage fault. • Wait for a while to check if it is back to normal. If yes, re-plug in and try charging the EV again. • If not, check whether the grid voltage is too high, then try charging the EV again. • Contact SolaX for help.
IE:0x00000200	UnderVoltL1_Fault	L1 phase undervoltage fault. • Wait for a while to check if it is back to normal. If yes, re-plug in and try charging the EV again. • If not, check whether the grid voltage is too low, then try charging the EV again. • Contact SolaX for help.
IE:0x00000400	OverVoltL2_Fault	L2 phase overvoltage fault. • Wait for a while to check if it is back to normal. If yes, re-plug in and try charging the EV again. • If not, check whether the grid voltage is too high, then try charging the EV again. • Contact SolaX for help.

Error Code	Fault	Diagnosis and Solutions
IE:0x00000800	UnderVoltL2_Fault	L2 phase undervoltage fault. • Wait for a while to check if it is back to normal. If yes, re-plug in and try charging the EV again. • If not, check whether the grid voltage is too low, then try charging the EV again. • Contact SolaX for help.
IE:0x00001000	OverVoltL3_Fault	L3 phase overvoltage fault. • Wait for a while to check if it is back to normal. If yes, re-plug in and try charging the EV again. • If not, check whether the grid voltage is too high, then try charging the EV again. • Contact SolaX for help.
IE:0x00002000	UnderVoltL3_Fault	L3 phase undervoltage fault. • Wait for a while to check if it is back to normal. If yes, re-plug in and try charging the EV again. • If not, check whether the grid voltage is too low, then try charging the EV again. • Contact SolaX for help.
IE:0x00004000	MeterCom_Fault	Metering chip communication fault. • Unplug the charging connector from the EV, power off and re-power the EV-Charger or save **EV Charger Reset** in the App. • Contact SolaX for help.
IE:0x00008000	485Com_Fault	RS485 communication fault. • Check and confirm that the communication cable for RS485 is intact and correctly connected. • Contact SolaX for help.
IE:0x00010000	PowerSelect_Fault	Power selection fault. • Unplug the charging connector from the EV, if it is back to normal, re-plug in and try charging the EV again. • Contact SolaX for help.
IE:0x00020000	CPVolt_Fault	CP voltage fault. • Unplug the charging connector from the EV, if it is back to normal, re-plug in and try charging the EV again. • Contact SolaX for help.

Error Code	Fault	Diagnosis and Solutions
IE:0x00040000	ElecLock_Fault	Electronic lock fault. • Plug in the charging connector on the EV-Charger end tightly; then plug in and unplug the charging connector on the EV end. When the indicator light turns from flashing yellow to green, the connector can be unplugged normally. • Plug in the charging connector on the EV-Charger end tightly; then unplug the charging connector on the EV end and save **EV Charger Reset** in the App or power off and restart the EV-Charger. The connector can be unplugged normally after successful restart. • For versions with emergency stop button, plug in the charging connector on the EV-Charger end tightly; then unplug the charging connector on the EV end. After that, press the emergency stop button, then the connector can be unplugged normally. After pulling out the connector, release the button. • Contact SolaX for help. (Notice: For Socket Type, unplug the charging connector from the EV end first, then the EV-Charger end.)
IE:0x00080000	MeterType_Fault	Meter type fault. • Change and install a meter as recommended. • Contact SolaX for help.
IE:0x00100000	OpenCharger_Fault	EV-Charger tampered alarm. • Check whether the upper cover has been removed. • Contact SolaX for help.
IE:0x00200000	PEN_Fault	PEN relay fault. • Unplug the charging connector from the EV, if it is back to normal, re-plug in and try charging the EV again. • If not, power off and re-power the EV-Charger or save **EV Charger Reset** in the App. • Contact SolaX for help.
IE:0x00400000	ParallelCom_Fault	Parallel communication fault. • Check whether the connections between the primary and secondary EV-Chargers are in good condition. • Contact SolaX for help.

Error Code	Fault	Diagnosis and Solutions
IE:0x00800000	Relay1Adhesion_ Fault	First relay welding detection fault. • Unplug the charging connector from the EV, power off and re-power the EV-Charger or save **EV Charger Reset** in the App, then re-plug in and try charging if it is back to normal. • Contact SolaX for help.
IE:0x01000000	Relay1Refused_ Fault	First relay malfunction fault. • Unplug the charging connector from the EV, if it is back to normal, re-plug in and try charging the EV again. • Contact SolaX for help.
IE:0x02000000	Relay2Adhesion_ Fault	Second relay welding detection fault. • Unplug the charging connector from the EV, power off and re-power the EV-Charger or save **EV Charger Reset** in the App, then re-plug in and try charging if it is back to normal. • Contact SolaX for help.
IE:0x04000000	Relay2Refused_ Fault	Second relay malfunction fault. • Unplug the charging connector from the EV, if it is back to normal, re-plug in and try charging the EV again. • Contact SolaX for help.

12.3 Maintenance

Regular maintenance is required for the device. Please check and maintain the following items based on the instructions below to ensure the optimal performance of the device. For devices working in inferior conditions, more frequent maintenance is required. Please keep maintenance records.

WARNING!

- Only qualified person can perform the maintenance for the EV-Charger.
- Only spare parts and accessories authorized by SolaX can be used for maintenance.

Table 12-2 Proposal of Maintenance

Item	Check Notes	Maintenance Interval
Safety check	• Check if the device is functioning properly. • The safety checks shall be performed by manufacturer's qualified person who has adequate training, knowledge, and practical experience.	Every 12 months
EMERGENCY STOP button	Press and release the button for three consecutive times to check if it works normally.	Every 6 months
LED indicator (and LCD screen)	• Check if the indicator is in normal state. • Check if the display of the device (if it has a screen) is in normal state.	Every 6 months
Wiring connections	• Check if the cables are securely connected. • Check if the cables are damaged or aged. • Check if the terminals and ports are intact. • Check if the charging connector is in good condition.	Every 6 months
Grounding reliability	Check if the ground terminal and ground wire are securely connected.	Every 12 months
Housing	Clean and check its security.	Every 6 months

NOTICE!

- The maintenance should be adequately performed based on the specific model.

NOTICE!

- When your EV-Charger needs to be upgraded by the service personnel, please make sure to unplug the charging connector from the EV.

13 Decommissioning

13.1 Disassembling the EV-Charger

WARNING!

- When disassembling the EV-Charger, strictly follow the steps as below.
- Use insulated tools and wear individual protective tools when disassembling the EV-Charger.

Step 1: Turn off the RCBO to disconnect the EV-Charger from the grid and/or inverter.

Step 2: Wait for at least 5 minutes to fully discharge the capacitors inside the EV-Charger.

Step 3: Remove the padlock if there is one hanged.

Step 4: Remove the four M5 screws on both sides of the EV-Charger.

Step 5: Take down the body part of the EV-Charger (For Plug type, remove the charging cable and connector as well).

Step 6: Remove the RJ45 terminal from the RJ45 terminal adapter, loosen the swivel nut of the communication terminal and pull out the communication cable(s) from the base plate.

Step 7: Remove the M4 screw from the panel and remove the panel.

Step 8: Remove the screws on the AC input wires, loosen the swivel nut of the AC input terminal and pull out the AC input cable from the base plate.

Step 9: Remove the base plate (For Plug type, remove the cable hook as well).

13.2 Packing the EV-Charger

- Use the original packaging materials if available.
- If the original packing material is not available, use the packing material which meets the following requirements:
  - » Suitable for the weight and dimension of product
  - » Convenient for transportation
  - » Can be sealed with adhesive tape

13.3 Disposing of the EV-Charger

Properly dispose of the EV-Charger and accessories in accordance with local regulations on the disposal of electronic waste.

14 Technical Data

- Model List

Models	4.6 kW	7.4 kW	11 kW	22 kW
Specific model list	X1-HAC-4P X1-HAC-4P-B X1-HAC-4P-L X1-HAC-4P-L-B	X1-HAC-7P X1-HAC-7S X1-HAC-7P-L X1-HAC-7S-L X1-HAC-7P-B X1-HAC-7S-B X1-HAC-7P-L-B X1-HAC-7S-L-B X1-HAC-7P-B4G X1-HAC-7S-B4G X1-HAC-7P-E X1-HAC-7S-E	X3-HAC-11P X3-HAC-11S X3-HAC-11P-L X3-HAC-11S-L X3-HAC-11P-B X3-HAC-11S-B X3-HAC-11P-L-B X3-HAC-11S-L-B X3-HAC-11P-B4G X3-HAC-11S-B4G X3-HAC-11P-E X3-HAC-11S-E	X3-HAC-22P X3-HAC-22S X3-HAC-22P-L X3-HAC-22S-L X3-HAC-22P-B X3-HAC-22S-B X3-HAC-22P-L-B X3-HAC-22S-L-B X3-HAC-22P-B4G X3-HAC-22S-B4G X3-HAC-22P-E X3-HAC-22S-E

- General Data

Models	4.6 kW	7.4 kW	11 kW	22 kW
AC Nominal Input				
Phases/Lines	L+N+PE	L+N+PE	3P+N+PE	3P+N+PE
Voltage [V]	230	230	400	400
Frequency [Hz]	50/60; ±5	50/60; ±5	50/60; ±5	50/60; ±5
Grid Earth Type	TN, TT, IT			
AC Nominal Output				
Voltage [V]	230	230	400	400
Current [A]	20	32	16	32
Power [W]	4600	7400	11000	22000
Interface & Communication				
Communication interface	WiFi / Ethernet / RS485×2 / Optional: 4G*			
Protocol	OCPP 1.6j, Modbus TCP, Modbus RTU, Cloud API			
Communicate with vehicle	IEC 61851-1			
Authentication	Plug & Charge / RFID (ISO-14443-A) / APP			
MID meter	External (Optional)			
HMI	RGB LED / APP / LCD (Optional)			
Remote control	APP & Web			
Application	Residential / Destination place / Public			
RFID	13.56MHz/8.60dBμA/m@3m			

Models	4.6 kW	7.4 kW	11 kW	22 kW
General Data				
Housing Material	PC			
Installation Method	Wall-mounted (Optional: pedestal-mounted)			
Charging Outlet	Socket Type (Socket-outlet) / Plug Type (Charging cable with connector)			
Cable Length [m]	6.5 (for Plug Type)			
Operating Ambient Temperature Range [°C]	-30 to +50 (without screen) / -25 to +50 (with screen)			
Storage Temperature [°C]	-40 to +60			
Working Humidity	5%~95% (Non-condensing)			
Working Altitude [m]	<2000			
Ingress Protection	IP65 for Plug Type, IP54 for Socket Type			
Impact Resistant	IK10 for outer shell, IK08 for screen			
Protective Class	Class Ⅰ			
Cooling Method	Natural cooling			
Application Site	Indoor/Outdoor			
Dimension (W×H×D) [mm]	206×390×139			
Net Weight [kg]	5 for Plug Type	3 for Socket Type, 5 for Plug Type	3 for Socket Type, 6.5 for Plug Type	3 for Socket Type, 6.5 for Plug Type
Communication Info				
Communication Mode 1	WiFi			
EIRP Power	18.93 dBm (Measured Max. Average)			
Frequency	2412–2472MHz (TX/RX), 2422–2462MHz (TX/RX)			
Antenna Gain	2.83 dBi			
Antenna Type	Rod antenna			
Wireless Mode	802.11 b/g/n			
Communication Mode 2	LAN			
Ethernet	DHCP			
Communication Mode 3 *	4G / 2G			
Max. Power	GSM: ≤33 dBm (GSM 900); ≤30 dBm (GSM 1800); LTE: ≤21 dBm			
Frequency	GSM 900: 880–915MHz (TX), 925–960MHz (RX) DCS 1800: 1710–1785MHz (TX), 1805–1880MHz (RX) LTE (Cat-M1&Nb-IoT) Band 1: 1920–1980MHz (TX), 2110–2170MHz (RX) LTE (Cat-M1&Nb-IoT) Band 3: 1710–1785MHz (TX), 1805–1880MHz (RX) LTE (Cat-M1&Nb-IoT) Band 8: 880–915MHz (TX), 925–960MHz (RX) LTE (Cat-M1&Nb-IoT) Band 20: 832–862MHz (TX), 791–821MHz (RX) LTE (Cat-M1&Nb-IoT) Band 28: 703–748MHz (TX), 758–803MHz (RX)			
Antenna Gain	3.64 dBi			
Antenna Type	FPC antenna			

* Only for models named with "4G".

- Security & Protection

Models	4.6 kW	7.4 kW	11 kW	22 kW
Multiple Protection				
Over/Under voltage protection	Yes			
Overload protection	Yes			
Short circuit protection	Yes			
Current leakage monitoring	Integrated current failure monitoring (30 mA AC [1] & 6 mA DC) [2]			
Grounding protection	Yes			
Surge protection	Yes			
Over temperature protection	Yes			
Cable protection [3]	Cable Lock (APP control)			
Relay protection	Relay weld detection			
Safety Standard	IEC61851-1; IEC62196-2			
Built-in PEN Fault Technology [4]	According to BS 7671:2018 requirements			

[1] In some areas, the device is not equipped with 30 mA AC protector.
[2] This document does not replace any regional, state, provincial or national laws, regulations or standards that apply to the installation, electrical safety and use of the product. Always observe the local regulations as well.
[3] Only for Socket Type.
[4] Only for models named with "-E".

15 Appendix

15.1 RFID Management Function

15.1.1 Introduction of RFID Management Function

For most destination charging scenario, RFID is the mostly used activation method because of its convenience and safety. The RFID card management function is developed to help the charging station operator to manage the RFID card easily. This function can help the operator to do below things:

- Add new RFID card into the charging station system. This function is used for the operator to assign a new RFID card to a new user or an old user who has lost the original card.
- Delete RFID card. This function is used while some users lose their original card, the operator can delete the lost card from the system.
- Check charging history for each RFID card. This function can help the operator to know the total charging energy for each user and to bill the user.
- Support third party RFID card. This function can allow the operator to add third party RFID card into the system, the third party RFID must meet ISO 14443-A standard.
- Support NFC activation. This function can support the NFC function of smart phones to copy the RFID card number.

Only RFID cards listed on the management function can activate the EV-Charger.

For the number of RFID cards: There is no limit when the EV-Charger is online (connected to the network server) and a maximum of ten can be stored on the EV-Charger when off-line.

15.1.2 Operation of RFID Management Function

NOTICE!

- The operations should be done via the App, the App version must be V5.4.0 and above.
- In order to allow this function working normally, the **Activation mode** must be selected as **RFID** on the settings page following the path: **Charger setting** > **Activation mode** > **RFID**.

This function can be accessed following the path: **Me** > **EVC Card** > **Charger Card Management** in the App.

Operations

- Select card: The function is based on each plant, you need to choose one plant from the upper part of the function main page or the **Home** page. The RFID cards in the plant will be shown on the page. Scroll up and down to see more cards. You can find a certain card from the list or enter related information in the search box to select. The selected card will display on the top.
- Edit card: Touch **...** on the upper right corner of each card, then select **Edit** and confirm, you can edit a user name for each card in the App.
- Add card: Touch the ⊕ icon on the upper right corner of the function main page to enter **Add card** page. There are three methods to add the cards.
  - » Scan the barcode: This method is for the RFID cards with barcode from SolaX. Touch ⛶ to scan and add.
  - » Enter the card number: This method is for the cards with card number from SolaX. Enter the card number in **RFID** box and **Save** to add.
  - » Bind through EV charger: This method is for the SolaX cards without barcode and card number and other third party cards. Touch Bind through EV charger ➲ and swipe the card on the card swiping position of the chosen EV-Charger.
- Delete card: Select and touch **...** on the upper right corner of the selected card, then select **Delete** and confirm to delete.

15.2 Parallel Function

15.2.1 Introduction of Parallel Function

For the users who like to install more than one EV-Charger under same circuit, they can use the parallel function.

In Solar scene, two EV-Chargers can be paralleled in one system. One EV-Charger can be operated as primary EV-Charger and the other secondary. The primary EV-Charger takes the responsibility to collect PV feed in information and grid energy consumption information together and to allocate the PV energy and remaining load capacity for the system according to allocation ratio.

In Standard scene, a maximum of 20 EV-Chargers can be paralleled in one system. One EV-Charger can be operated as primary EV-Charger and the rest secondary. The charging power will be allocated averagely among the EV-Chargers.

When using the parallel function, the secondary EV-Charger's work mode setting will be copied from the primary EV-Charger.

NOTICE!

- The EV-Chargers used in parallel function should be the same model.
- The firmware version of the EV-Chargers should be the same.

15.2.2 Connection Method

Parallel system in Solar scene

- Communication with Inverter

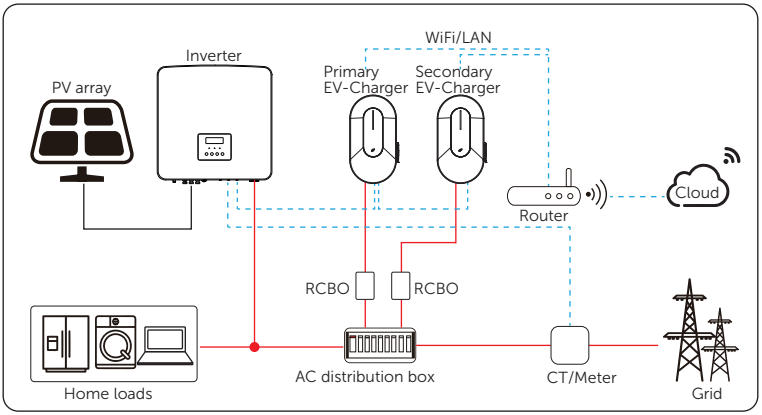

Figure 15-1 Parallel function - communication with inverter in Solar scene

1) Connect the primary EV-Charger's A1 & B1 of COM1-S- port to the inverter's COM or RS485 port according to the definitions of the communication ports of the specific inverter. (Please refer to the user manual of the specific inverter for details.)

2) Connect the primary EV-Charger's A2 & B2 of COM2-M- port to the secondary EV-Charger's A1 & B1 of COM1-S- port.

- Communication with CT/meter

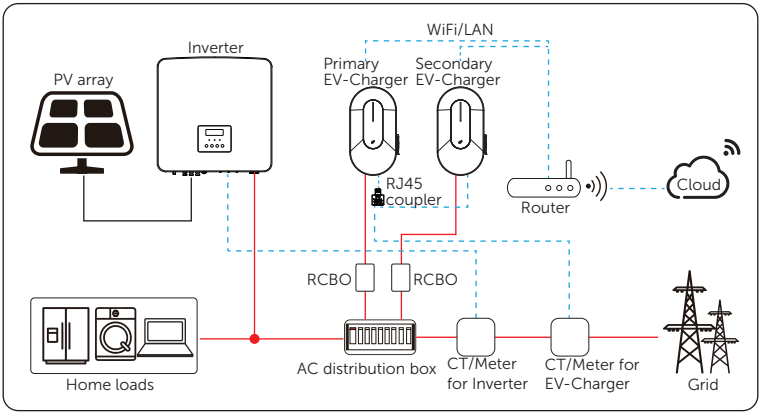

Figure 15-2 Parallel function - communication with CT/meter in Solar scene

1) Connect CT or meter to the primary EV-Charger's COM2-M- port.

2) Connect the primary EV-Charger's A2 & B2 of COM2-M- port to the secondary EV-Charger's A1 & B1 of COM1-S- port. (An RJ45 coupler is needed for COM2-M- port.)

Parallel system in Standard scene

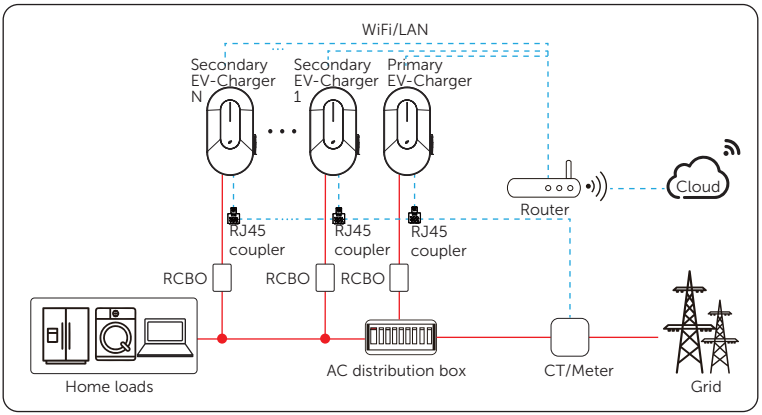

Figure 15-3 Parallel function in Standard scene

1) Connect CT or meter to the primary EV-Charger's COM2-M- port.

2) Connect the primary EV-Charger's A2 & B2 of COM2-M- port to the secondary EV-Chargers' A1 & B1 of COM1-S- port via RJ45 couplers.

NOTICE!

- RJ45 couplers need to be prepared by the user.
- For the specific wiring procedures, please refer to section "6.2 Installation and Wiring Steps".

15.2.3 Settings for Parallel Function

Do the App settings on the primary EV-Charger, the settings relating to work mode will be synchronized to the secondary EV-Charger. The parallel function setting can be done on the settings page following the path: **Advanced setting** > **Parallel Setting**.

1) Select **Primary** for the primary EV-Charger, the secondary EV-Charger(s) will automatically switch to **Secondary**.

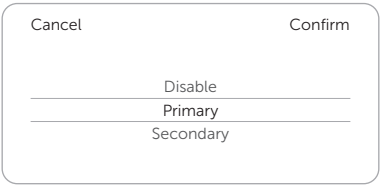

Figure 15-4 Set the primary EV-Charger

2) Set the items according to different scenarios.

- For Solar scene, set the **PowerAllocationRate** for **Primary** and **Secondary**. The default is 1:1, and supported ratio is 1:1, 1:2, 2:1. This feature is to allocate the PV energy and remaining load capacity for the two EV-Chargers if user needs.

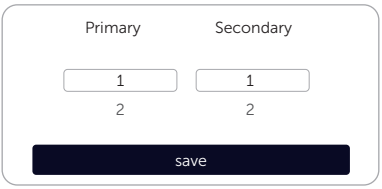

Figure 15-5 Set the power allocation rate

- For Standard scene, set and save the **Secondary number** according to the actual situation. The charging power will be allocated averagely among the EV-Chargers.

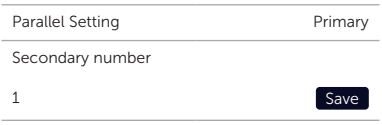

Figure 15-6 Set Secondary number

3) Enable and set the value for **Dynamic load balance** as needed on the primary EV-Charger following the path: **Charger setting** > **Dynamic load balance**.

4) Check the **Modbus Setting**, ensure that the addresses of the primary EV-Charger and the secondary EV-Charger which directly connected with the primary one are both set as 70, while the addresses of other secondary EV-Chargers are different.

For the settings on the inverter side when connected with inverter, please refer to the user manual of the specific inverter for details.

NOTICE!

- When parallel function is enabled, any work mode setting of the secondary EV-Charger should be done via the primary EV-Charger, no matter whether the primary EV-Charger is working or not; the settings done on the secondary EV-Charger are invalid.

NOTICE!

- When the EV-Chargers work in parallel, the primary EV-Charger will allocate the PV energy and remaining load capacity for EV-Chargers.
- When the primary EV-Charger or the secondary EV-Charger works alone, each can use full PV energy and remaining load capacity in Solar scene.

15.3 Voice Control Function

15.3.1 Introduction of Voice Control Function

The EV-Charger supports voice control with Alexa Echo to realise the smart control of the charging modes and get the information of it.

Please connect the Alexa Echo with power supply and download or update the Alexa App in you mobile device's App store in advance.

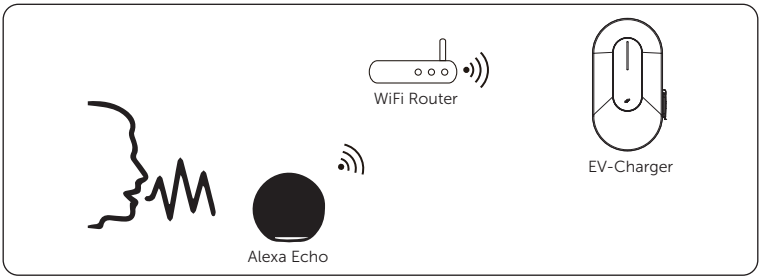

Figure 15-7 Voice control function

15.3.2 Operation of Voice Control Function

Step 1: Set up Alexa Echo.

a. Sign up and log into the Alexa App.

b. Select **Devices** at the bottom menu, and touch **+** on the upper right corner. Then select **Add Device**.

c. Select **Amazon Echo** and then **Echo, Echo Dot, Echo Pop and more**.

d. Follow the instructions to set up your Alexa Echo.

Step 2: Link with the EV-Charger.

a. Select **More** at the bottom menu, and select **Skills & Games**.

b. Search and select "**Solax Power**" (Note the case and space; it should be input as this exactly), then **LAUNCH** the skills to your Echo.

c. Click **SETTINGS**, then **Link Account**, and input your SolaXCloud account information.

d. Check the status, **Linked** indicates the skills are successfully linked.

Step 3: Say "Alexa, open smart energy" to Alexa Echo to launch the voice control skills. The following voice control skills are supported.

- my charger current status
- my charger current mode
- my charger about the amount of electricity charged this time
- my charger the charging power this time
- my charger set to Green mode
- my charger set to economy mode
- my charger set to Stop mode
- my charger set to Fast mode

15.4 4G Function

The series EV-Charger is optional with 4G function. This section is specially for EV-Chargers equipped with 4G function (models named with "4G"). If you want to use this function, prepare a 4G SIM card in advance and install the card and configure the network as required.

WARNING!

- The installation of the 4G SIM card must be performed by an authorized professional.

15.4.1 4G SIM Card Preparation

The 4G SIM card should meet the following requirements:

Table 15-1 Requirements for 4G SIM card

SIM card parameter	Description
Card type	Nano SIM, Size: 12.3 mm×8.8 mm×0.67 mm
Network deployment	Supporting one or more types of Cat-M, NB-IoT and GSM
Recommended monthly SIM traffic *	Solar scene / Standard scene: 100 MB OCPP scene: 300 MB

* The recommended traffic value can usually satisfy the daily use of the EV-Charger, but to cope with excessive traffic during peak usage, options that support the purchase of additional traffic are preferred.

NOTICE!

- Please choose local operators' SIM card and confirm its availability with your dealer.
- Please obtain the corresponding SIM card APN from the operators, and fill in the APN during configuration.

15.4.2 Installation of SIM Card

Step 1: Remove the two M4 screws holding the decoration cover in place and then remove the decoration cover.

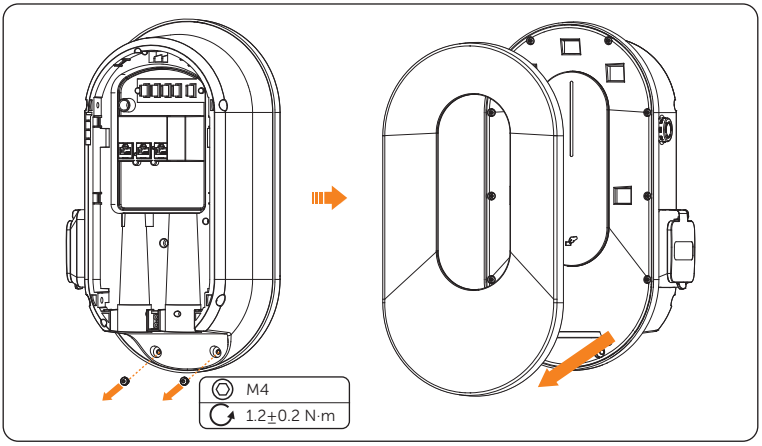

Figure 15-8 Remove the decoration cover

Step 2: Remove the ten ST3.5 self-tapping screws holding the front panel in place, then remove the front panel cover and locate the SIM card slot.

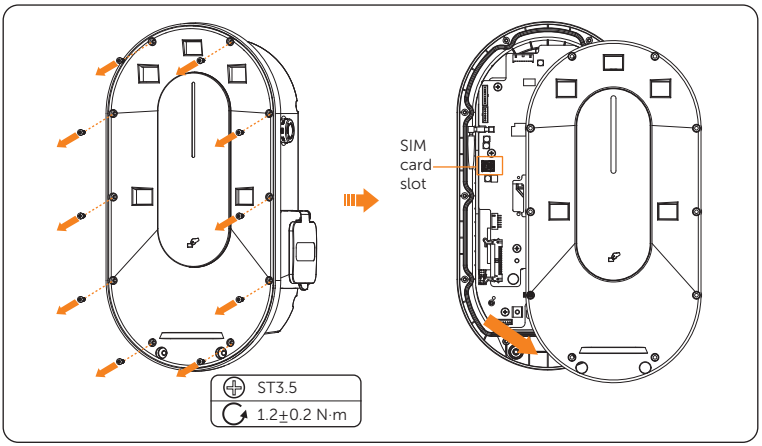

Figure 15-9 Remove the front panel cover and locate the SIM card slot

Step 3: Install the SIM card into the card slot as shown below.

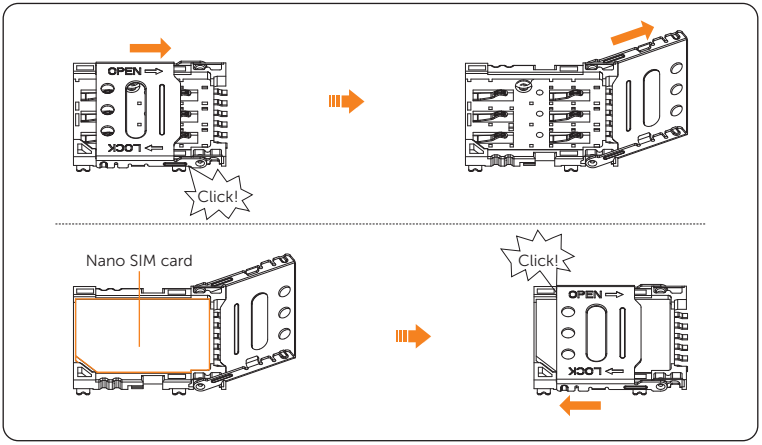

Figure 15-10 Install the SIM card

Step 4: Reinstall the front panel cover and tighten the ten ST3.5 self-tapping screws to hold it in place.

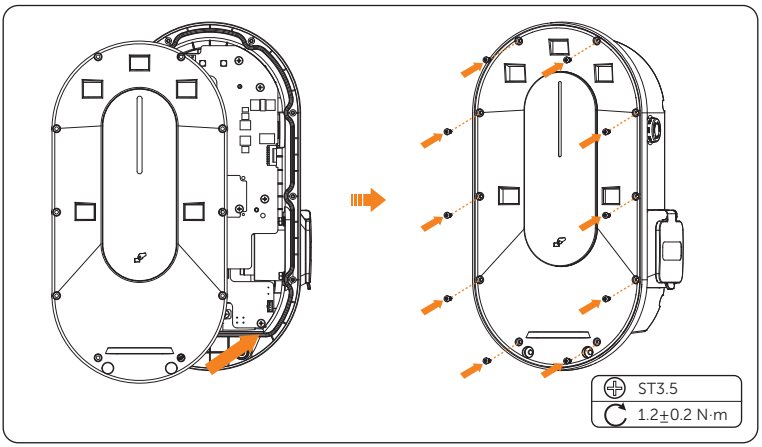

Figure 15-11 Reinstall the front panel cover

Step 5: Reinstall the decoration cover and tighten the two M4 screws to hold it in place.

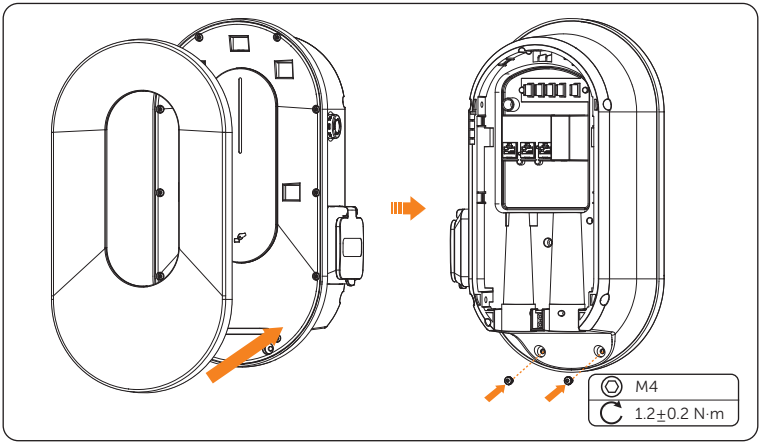

Figure 15-12 Reinstall the decoration cover

15.4.3 4G Configuration

Power on the EV-Charger after the installation is completed and configure the 4G network.

Step 1: Download the App, register and log in through local mode. (Please refer to "8 App Setting".)

Step 2: Select **Dongle** at the **Local Mode** page, and touch the setting button on the upper-right corner.

Step 3: Click **Wi-Fi** on the upper-right corner to see the drop down page and choose **4G** for **Device Networking Mode**.

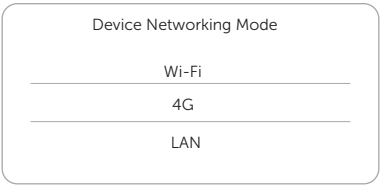

Figure 15-13 Device networking mode

Step 4: Type in the correct **APN**, select the **Network Deployment** which the SIM card supports, then click **Next** and wait for the network configuration to complete. There will be a successful notice if successfully connected.

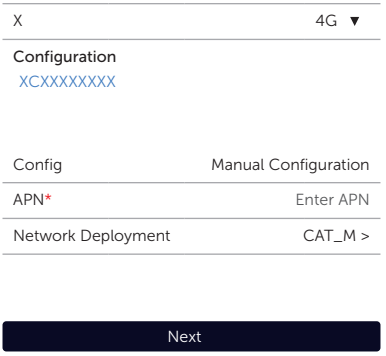

Figure 15-14 Network configuration

Step 5: Select **Dongle** at the **Local Mode** page to see the 4G status information and check the information and signal strength.

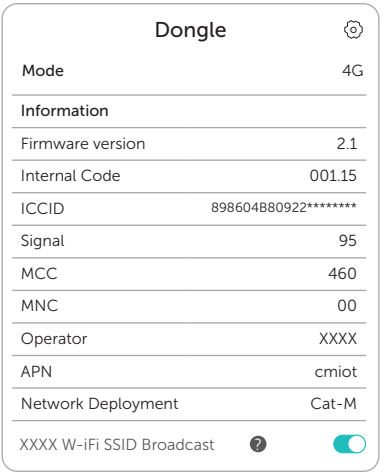

Figure 15-15 4G status information (one example)

If the 4G network configuration fails, please follow the instructions as below:

» Check whether the **APN** is correctly input or whether the **Network Deployment** is correct, and reconfigure the network.

» If the reconfiguration still fails, and the information of **ICCID**, **MCC**, **MNC** is blank, check whether the SIM card is correctly installed or replace it with another SIM card; if the information of **Signal** is blank, consult the operator

to confirm the APN and the network deployment then reconfigure the network.

Please contact with us if further assistance is needed.

15.5 Configuration for TOR R37 Regulation

WARNING!

- The configuration must be performed by an authorized professional.

NOTICE!

- The configuration should be done on the installer's account.

Step 1: Login in the App account, make sure to confirm your identity as **Installer**. (If you need to create a new account, please refer to "8 App Setting".)

Step 2: Turn to the **Device** page, and select **EV Charger** on the topper part of the page or input corresponding information in the search box.

Step 3: Choose the exact EV-Charger card from the list according to the device SN, and touch any part of the card.

Step 4: Select **Function Control** > **Settings**. The **Settings** page will be shown.

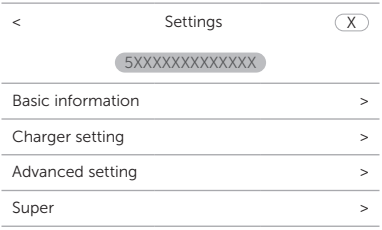

Figure 15-16 Settings page for installer's App

Step 5: Select **Advanced setting** > **Safety** > **TOR R37 Regulation (Austria)** and confirm.

Step 6: Select **Super** and input the unlock password (8888 by default) to enter the configuration page.

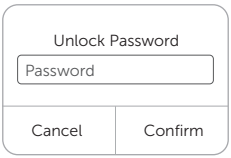

Figure 15-17 Input password for Super setting

Step 7: Complete the configuration on the newly appeared page.

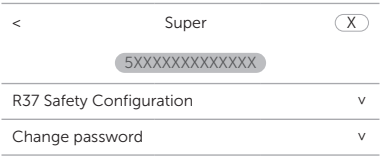

Figure 15-18 Configuration for R37

- Set and save the values for **R37 Safety Configuration** according to local regulation. The default settings are shown as below.

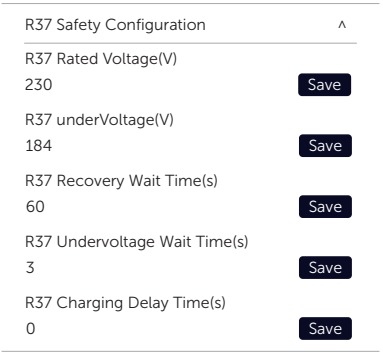

Figure 15-19 R37 Safety Configuration

Setting range:

R37 Rated Voltage(V): 200–300

R37 underVoltage(V): 120–260

R37 Undervoltage Wait Time(s): 3–5

- For your account safety, change your password by inputting and saving the new password.

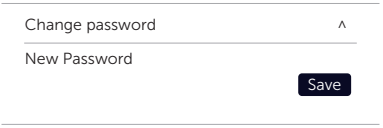

Figure 15-20 Change password

SIMPLIFIED EU DECLARATION OF CONFORMITY

The simplified EU declaration of conformity referred to in Article 10(9) shall be provided as follows. Hereby, [SolaX Power Network Technology (Zhejiang) Co., Ltd.] declares that the radio equipment type [X1/X3-HAC Series] is in compliance with Directive 2014/53/EU.

The full text of the EU declaration of conformity is available at the following internet address: www.solaxpower.com.

SolaX Power Network Technology (Zhejiang) Co., Ltd.

Add.: No. 278, Shizhu Road, Chengnan Sub-district, Tonglu County,
Hangzhou, Zhejiang, China
E-mail: info@solaxpower.com

Copyright © SolaX Power Network Technology (Zhejiang) Co., Ltd. All rights reserved.

320101103208