Technical parameters for heat pump space heaters and heat pump combination heaters

Model(s):	HM163HF UB60 / HN16XAHC NK1	
Air-to-water heat pump:	YES	~~NO~~
Water-to-water heat pump:	~~YES~~	NO
Brine-to-water heat pump:	~~YES~~	NO
Low-temperature heat pump:	~~YES~~	NO
Equipped with a supplementary heat	YES	~~NO~~
Heat pump combination heater:	~~YES~~	NO

Parameters shall be declared for medium-temperature application, except for low-temperature heat pumps.
For low- temperature heat pumps, parameters shall be declared for low-temperature application.
Parameters shall be declared for average climate conditions.

Low temperature application

Item	Symbol	Value	Unit
Rated heat output (*)	P_{rated}	12	kW
Declared capacity for heating for part load at indoor temperature 20 ° C and outdoor temperature T j			
T j = - 7 ° C	P_{dh}	10.4	kW
T j = + 2 ° C	P_{dh}	6.3	kW
T j = + 7 ° C	P_{dh}	4.1	kW
T j = + 12 ° C	P_{dh}	3.7	kW
T j = bivalent temperature	P_{dh}	11.7	kW
T j = operation limit temperature	P_{dh}	11.7	kW
For air-to-water heat pumps: Tj=-15℃ (if TOL < -20℃)	P_{dh}	x,x	kW
Bivalent temperature	T_{biv}	-10	℃
Cycling interval capacity for heat	P_{cych}	x,x	kW
Degradation co-efficient(**)	C_{dh}	0.9	

Item	Symbol	Value	Unit
Seasonal space heating energy efficiency η_s		201%	
Declared coefficient of performance or primary energy ratio for part load at indoor temperature 20 ° C and outdoor temperature T j			
T j = - 7 ° C	COPd or PERd	3.12	- or %
T j = + 2 ° C	COPd or PERd	5.02	- or %
T j = + 7 ° C	COPd or PERd	6.70	- or %
T j = + 12 ° C	COPd or PERd	8.45	- or %
T j = bivalent temperature	COPd or PERd	2.80	- or %
T j = operation limit temperature	COPd or PERd	2.80	- or %
For air-to-water heat pumps: Tj=-15℃ (if TOL < -20℃)	COPd or PERd	x,xx	- or %
Cycling interval efficiency	COPcyc or PERcyc	x,xx	- or %
Heating water operating limit temperatur	WTOL	75	℃

Medium temperature application

Item	Symbol	Value	Unit
Rated heat output (*)	P_{rated}	12	kW
Declared capacity for heating for part load at indoor temperature 20 ° C and outdoor temperature T j			
T j = - 7 ° C	P_{dh}	10.4	kW
T j = + 2 ° C	P_{dh}	6.3	kW
T j = + 7 ° C	P_{dh}	4.2	kW
T j = + 12 ° C	P_{dh}	3.6	kW
T j = bivalent temperature	P_{dh}	10.4	kW
T j = operation limit temperature	P_{dh}	11.4	kW
For air-to-water heat pumps: Tj=-15℃ (if TOL < -20℃)	P_{dh}	x,x	kW
Bivalent temperature	T_{biv}	-7	℃
Cycling interval capacity for heat	P_{cych}	x,x	kW
Degradation co-efficient(**)	C_{dh}	0.9	

Item	Symbol	Value	Unit
Seasonal space heating energy efficiency η_s		154%	
Declared coefficient of performance or primary energy ratio for part load at indoor temperature 20 ° C and outdoor temperature T j			
T j = - 7 ° C	COPd or PERd	2.34	- or %
T j = + 2 ° C	COPd or PERd	3.90	- or %
T j = + 7 ° C	COPd or PERd	5.05	- or %
T j = + 12 ° C	COPd or PERd	6.75	- or %
T j = bivalent temperature	COPd or PERd	2.34	- or %
T j = operation limit temperature	COPd or PERd	2.30	- or %
For air-to-water heat pumps: Tj=-15℃ (if TOL < -20℃)	COPd or PERd	x,xx	- or %
For air -to-water heat pumps: Operation limit temperature	TOL	-15	℃
Cycling interval efficiency	COPcyc or PERcyc	x,xx	- or %
Heating water operating limit temperatur	WTOL	75	℃

Power consumption in modes other than active mode			
Off mode	P_{OFF}	0.010	kW
Thermostat-off mode	P_{TO}	0.030	kW
Standby mode	P_{SB}	0.010	kW
Crankcase heater mode	P_{CK}	0.000	kW

Supplementary heater			
Rated heat output (*)	Psup	6.7	kW
Type of energy input		Electric	

Other items			
Capacity control		Variable	
Sound power level, indoors/outdoor	$L_{WA,indoor}$	39	dB
	$L_{WA,Outdoor}$	52	dB
Annual electricity consumption (Low Temp)	Q HE, (Low Temp)	4735	kWh
Annual electricity consumption (Mid Temp)	Q HE (Mid Temp)	6162	kWh

For air-to-water heat pumps: Rated air flow rate, outdoors (Low Temp)		2388	m^3/h
For air-to-water heat pumps: Rated air flow rate, outdoors (Mid. Temp)		3690	m^3/h
For water-/brine-to-water heat pumps: Rated brine or water flow rate, outdoor heat exchanger		x	
Water Pump EEI	≤	0.20	

"The benchmark for the most efficient circulators is EEI ≤ 0,20."；

For heat pump combination heater			
Declared load profile		x	
Daily elecrictiy consumption	Qelec	x.xxx	kWh
Annual electricity consumption	AEC	x	kWh

Water heating energy efficiency	η_{wh}	x	%
Daily fuel consumption	Qfuel	x,xxx	kWh
Annual fuel consumption	AFC	x	GJ

Contact details

Name : Christianna Papazahariou
Position : European Regulatory Manager
E-mail address : chris.papazahariou@lge.com Tel. 01 49 89 57 41 - 06 83 077 455
Postal address : Paris Nord II - 117 avenue des Nations BP 59372
Villepinte - 95942 Roissy CDG Cedex
www.lg.com

(*) For heat pump space heaters and heat pump combination heaters, the rated heat output Prated is equal to the design load for heating Pdesignh, and the rated heat output of a supplementary heater Psup is equal to the supplementary capacity for heating sup(Tj).

(**) If Cdh is not determined by measurement then the default degradation coefficient is Cdh = 0,9.

Warmer climate

Low temperature application

Item	Symbol	Value	Unit
Rated heat output (*)	P_{rated}	12	kW
Declared capacity for heating for part load at indoor temperature 20 ° C and outdoor temperature T j			
T j = + 2 ° C	P_{dh}	11.5	kW
T j = + 7 ° C	P_{dh}	7.4	kW
T j = + 12 ° C	P_{dh}	3.3	kW
T j = bivalent temperature	P_{dh}	11.5	kW
T j = operation limit temperature	P_{dh}	11.5	kW
For air-to-water heat pumps: Tj=-15℃ (if TOL < -20℃)	P_{dh}	x,x	kW
Bivalent temperature	T_{biv}	2	℃
Cycling interval capacity for heat	P_{cych}	x,x	kW
Degradation co-efficient(**)	C_{dh}	0.9	

Item	Symbol	Value	Unit
Seasonal space heating energy efficiency η_s		251%	
Declared coefficient of performance or primary energy ratio for part load at indoor temperature 20 ° C and outdoor temperature T j			
T j = + 2 ° C	COPd or PERd	3.70	- or %
T j = + 7 ° C	COPd or PERd	5.80	- or %
T j = + 12 ° C	COPd or PERd	7.60	- or %
T j = bivalent temperature	COPd or PERd	3.70	- or %
T j = operation limit temperature	COPd or PERd	3.70	- or %
For air-to-water heat pumps: Tj=-15℃ (if TOL < -20℃)	COPd or PERd	x,xx	- or %
Cycling interval efficiency	COPcyc or PERcyc	x,xx	- or %

Medium temperature application

Item	Symbol	Value	Unit
Rated heat output (*)	P_{rated}	13	kW
Declared capacity for heating for part load at indoor temperature 20 ° C and outdoor temperature T j			
T j = + 2 ° C	P_{dh}	13.0	kW
T j = + 7 ° C	P_{dh}	8.4	kW
T j = + 12 ° C	P_{dh}	3.7	kW
T j = bivalent temperature	P_{dh}	13.0	kW
T j = operation limit temperature	P_{dh}	13.0	kW
For air-to-water heat pumps: Tj=-15℃ (if TOL < -20℃)	P_{dh}	x,x	kW
Bivalent temperature	T_{biv}	2	℃
Cycling interval capacity for heat	P_{cych}	x,x	kW
Degradation co-efficient(**)	C_{dh}	0.9	

Item	Symbol	Value	Unit
Seasonal space heating energy efficiency η_s		191%	
Declared coefficient of performance or primary energy ratio for part load at indoor temperature 20 ° C and outdoor temperature T j			
T j = + 2 ° C	COPd or PERd	2.75	- or %
T j = + 7 ° C	COPd or PERd	4.00	- or %
T j = + 12 ° C	COPd or PERd	6.40	- or %
T j = bivalent temperature	COPd or PERd	2.75	- or %
T j = operation limit temperature	COPd or PERd	2.75	- or %
For air-to-water heat pumps: Tj=-15℃ (if TOL < -20℃)	COPd or PERd	x,xx	- or %
Cycling interval efficiency	COPcyc or PERcyc	x,xx	- or %

Annual electricity consumption (Low Temp)	Q HE, (Low Temp)	2418	kWh
Annual electricity consumption (Mid Temp)	Q HE (Mid Temp)	3578	kWh

Colder climate

Low temperature application

Item	Symbol	Value	Unit
Rated heat output (*)	P_{rated}	16	kW
Declared capacity for heating for part load at indoor temperature 20 ° C and outdoor temperature T j			
T j = - 7 ° C	P_{dh}	9.4	kW
T j = + 2 ° C	P_{dh}	5.7	kW
T j = + 7 ° C	P_{dh}	3.7	kW
T j = + 12 ° C	P_{dh}	3.7	kW
T j = bivalent temperature	P_{dh}	9.4	kW
T j = operation limit temperature	P_{dh}	10.8	kW
For air-to-water heat pumps: Tj=-15℃ (if TOL < -20℃)	P_{dh}	x,x	kW
Bivalent temperature	T_{biv}	-7	℃
Cycling interval capacity for heat	P_{cych}	x,x	kW
Degradation co-efficient(**)	C_{dh}	0.9	

Item	Symbol	Value	Unit
Seasonal space heating energy efficiency η_s		152%	
Declared coefficient of performance or primary energy ratio for part load at indoor temperature 20 ° C and outdoor temperature T j			
T j = - 7 ° C	COPd or PERd	3.42	- or %
T j = + 2 ° C	COPd or PERd	5.40	- or %
T j = + 7 ° C	COPd or PERd	7.20	- or %
T j = + 12 ° C	COPd or PERd	8.70	- or %
T j = bivalent temperature	COPd or PERd	3.42	- or %
T j = operation limit temperature	COPd or PERd	2.80	- or %
For air-to-water heat pumps: Tj=-15℃ (if TOL < -20℃)	COPd or PERd	x,xx	- or %
Cycling interval efficiency	COPcyc or PERcyc	x,xx	- or %

Medium temperature application

Item	Symbol	Value	Unit
Rated heat output (*)	P_{rated}	17	kW
Declared capacity for heating for part load at indoor temperature 20 ° C and outdoor temperature T j			
T j = - 7 ° C	P_{dh}	10.3	kW
T j = + 2 ° C	P_{dh}	6.3	kW
T j = + 7 ° C	P_{dh}	4.0	kW
T j = + 12 ° C	P_{dh}	3.6	kW
T j = bivalent temperature	P_{dh}	10.3	kW
T j = operation limit temperature	P_{dh}	10.3	kW
For air-to-water heat pumps: Tj=-15℃ (if TOL < -20℃)	P_{dh}	x,x	kW
Bivalent temperature	T_{biv}	-7	℃
Cycling interval capacity for heat	P_{cych}	x,x	kW
Degradation co-efficient(**)	C_{dh}	0.9	

Item	Symbol	Value	Unit
Seasonal space heating energy efficiency η_s		125%	
Declared coefficient of performance or primary energy ratio for part load at indoor temperature 20 ° C and outdoor temperature T j			
T j = - 7 ° C	COPd or PERd	2.78	- or %
T j = + 2 ° C	COPd or PERd	4.25	- or %
T j = + 7 ° C	COPd or PERd	6.00	- or %
T j = + 12 ° C	COPd or PERd	7.25	- or %
T j = bivalent temperature	COPd or PERd	2.78	- or %
T j = operation limit temperature	COPd or PERd	2.31	- or %
For air-to-water heat pumps: Tj=-15℃ (if TOL < -20℃)	COPd or PERd	x,xx	- or %
Cycling interval efficiency	COPcyc or PERcyc	x,xx	- or %

Annual electricity consumption (Low Temp)	Q HE, (Low Temp)	9882	kWh
Annual electricity consumption (Mid Temp)	Q HE (Mid Temp)	13091	kWh

Technical parameters for heat pump space heaters and heat pump combination heaters

Model(s):	HM163HF UB60 / HN1639HC NK0	
Air-to-water heat pump:	YES	~~NO~~
Water-to-water heat pump:	~~YES~~	NO
Brine-to-water heat pump:	~~YES~~	NO
Low-temperature heat pump:	~~YES~~	NO
Equipped with a supplementary heater:	YES	~~NO~~
Heat pump combination heater:	~~YES~~	NO

Parameters shall be declared for medium-temperature application, except for low-temperature heat pumps.
For low- temperature heat pumps, parameters shall be declared for low-temperature application.
Parameters shall be declared for average climate conditions.

Low temperature application

Item	Symbol	Value	Unit
Rated heat output (*)	P_{rated}	12	kW
Declared capacity for heating for part load at indoor temperature 20 °C and outdoor temperature T j			
T j = – 7 °C	P_{dh}	10.4	kW
T j = + 2 °C	P_{dh}	6.3	kW
T j = + 7 °C	P_{dh}	4.1	kW
T j = + 12 °C	P_{dh}	3.7	kW
T j = bivalent temperature	P_{dh}	11.7	kW
T j = operation limit temperature	P_{dh}	11.7	kW
For air-to-water heat pumps: Tj=-15°C (if TOL < -20°C)	P_{dh}	x,x	kW
Bivalent temperature	T_{biv}	-10	°C
Cycling interval capacity for heating	P_{cych}	x,x	kW
Degradation co-efficient(**)	C_{dh}	0.9	

Item	Symbol	Value	Unit
Seasonal space heating energy efficiency	η_s	201%	
Declared coefficient of performance or primary energy ratio for part load at indoor temperature 20 °C and outdoor temperature T j			
T j = – 7 °C	COPd or PERd	3.12	– or %
T j = + 2 °C	COPd or PERd	5.02	– or %
T j = + 7 °C	COPd or PERd	6.70	– or %
T j = + 12 °C	COPd or PERd	8.45	– or %
T j = bivalent temperature	COPd or PERd	2.80	– or %
T j = operation limit temperature	COPd or PERd	2.80	– or %
For air-to-water heat pumps: Tj=-15°C (if TOL < -20°C)	COPd or PERd	x,xx	– or %
Cycling interval efficiency	COPcyc or PERcyc	x,xx	– or %
Heating water operating limit temperature	WTOL	75	°C

Medium temperature application

Item	Symbol	Value	Unit
Rated heat output (*)	P_{rated}	12	kW
Declared capacity for heating for part load at indoor temperature 20 °C and outdoor temperature T j			
T j = – 7 °C	P_{dh}	10.4	kW
T j = + 2 °C	P_{dh}	6.3	kW
T j = + 7 °C	P_{dh}	4.2	kW
T j = + 12 °C	P_{dh}	3.6	kW
T j = bivalent temperature	P_{dh}	10.4	kW
T j = operation limit temperature	P_{dh}	11.4	kW
For air-to-water heat pumps: Tj=-15°C (if TOL < -20°C)	P_{dh}	x,x	kW
Bivalent temperature	T_{biv}	-7	°C
Cycling interval capacity for heating	P_{cych}	x,x	kW
Degradation co-efficient(**)	C_{dh}	0.9	

Item	Symbol	Value	Unit
Seasonal space heating energy efficiency	η_s	154%	
Declared coefficient of performance or primary energy ratio for part load at indoor temperature 20 °C and outdoor temperature T j			
T j = – 7 °C	COPd or PERd	2.34	– or %
T j = + 2 °C	COPd or PERd	3.90	– or %
T j = + 7 °C	COPd or PERd	5.05	– or %
T j = + 12 °C	COPd or PERd	6.75	– or %
T j = bivalent temperature	COPd or PERd	2.34	– or %
T j = operation limit temperature	COPd or PERd	2.30	– or %
For air-to-water heat pumps: Tj=-15°C (if TOL < -20°C)	COPd or PERd	x,xx	– or %
For air -to-water heat pumps: Operation limit temperature	TOL	-15	°C
Cycling interval efficiency	COPcyc or PERcyc	x,xx	– or %
Heating water operating limit temperature	WTOL	75	°C

Power consumption in modes other than active mode			
Off mode	P_{OFF}	0.010	kW
Thermostat-off mode	P_{TO}	0.030	kW
Standby mode	P_{SB}	0.010	kW
Crankcase heater mode	P_{CK}	0.000	kW

Supplementary heater			
Rated heat output (*)	Psup	6.7	kW
Type of energy input		Electric	

Other items			
Capacity control	Variable		
Sound power level, indoors/outdoors	$L_{WA,indoor}$	39	dB
	$L_{WA,Outdoor}$	52	dB
Annual electricity consumption (Low Temp)	Q HE, (Low Temp)	4735	kWh
Annual electricity consumption (Mid Temp)	Q HE (Mid Temp)	6162	kWh

For air-to-water heat pumps: Rated air flow rate, outdoors (Low Temp)		2388	m^3/h
For air-to-water heat pumps: Rated air flow rate, outdoors (Mid. Temp)		3690	m^3/h
For water-/brine-to-water heat pumps: Rated brine or water flow rate, outdoor heat exchanger		x	
Water Pump EEI	≤	0.20	

"The benchmark for the most efficient circulators is EEI ≤ 0,20.";

For heat pump combination heater			
Declared load profile	x		
Daily elecrictiy consumption	Qelec	x.xxx	kWh
Annual electricity consumption	AEC	x	kWh

Water heating energy efficiency	η_{wh}	x	%
Daily fuel consumption	Qfuel	x,xxx	kWh
Annual fuel consumption	AFC	x	GJ

Contact details	Name : Christianna Papazahariou Position : Head of EU Engineering Centre and Business Strategy AS E-mail address : chris.papazahariou@lge.com Tel. 01 49 89 57 41 - 06 83 077 455 Postal address : LG Electronics 25, quai du Président Paul Doumer 92400 Courbevoie www.lg.com

(*) For heat pump space heaters and heat pump combination heaters, the rated heat output Prated is equal to the design load for heating Pdesignh, and the rated heat output of a supplementary heater Psup is equal to the supplementary capacity for heating sup(Tj).

(**) If Cdh is not determined by measurement then the default degradation coefficient is Cdh = 0,9.

Warmer climate

Low temperature application

Item	Symbol	Value	Unit
Rated heat output (*)	P_{rated}	12	kW
Declared capacity for heating for part load at indoor temperature 20 °C and outdoor temperature T j			
T j = + 2 °C	P_{dh}	11.5	kW
T j = + 7 °C	P_{dh}	7.4	kW
T j = + 12 °C	P_{dh}	3.3	kW
T j = bivalent temperature	P_{dh}	11.5	kW
T j = operation limit temperature	P_{dh}	11.5	kW
For air-to-water heat pumps: Tj=-15℃ (if TOL < -20℃)	P_{dh}	x,x	kW
Bivalent temperature	T_{biv}	2	℃
Cycling interval capacity for heating	P_{cych}	x,x	kW
Degradation co-efficient(**)	C_{dh}	0.9	

Item	Symbol	Value	Unit
Seasonal space heating energy efficiency	η_s	251%	
Declared coefficient of performance or primary energy ratio for part load at indoor temperature 20 °C and outdoor temperature T j			
T j = + 2 °C	COPd or PERd	3.70	– or %
T j = + 7 °C	COPd or PERd	5.80	– or %
T j = + 12 °C	COPd or PERd	7.60	– or %
T j = bivalent temperature	COPd or PERd	3.70	– or %
T j = operation limit temperature	COPd or PERd	3.70	– or %
For air-to-water heat pumps: Tj=-15℃ (if TOL < -20℃)	COPd or PERd	x,xx	– or %
Cycling interval efficiency	COPcyc or PERcyc	x,xx	– or %

Medium temperature application

Item	Symbol	Value	Unit
Rated heat output (*)	P_{rated}	13	kW
Declared capacity for heating for part load at indoor temperature 20 °C and outdoor temperature T j			
T j = + 2 °C	P_{dh}	13.0	kW
T j = + 7 °C	P_{dh}	8.4	kW
T j = + 12 °C	P_{dh}	3.7	kW
T j = bivalent temperature	P_{dh}	13.0	kW
T j = operation limit temperature	P_{dh}	13.0	kW
For air-to-water heat pumps: Tj=-15℃ (if TOL < -20℃)	P_{dh}	x,x	kW
Bivalent temperature	T_{biv}	2	℃
Cycling interval capacity for heating	P_{cych}	x,x	kW
Degradation co-efficient(**)	C_{dh}	0.9	

Item	Symbol	Value	Unit
Seasonal space heating energy efficiency	η_s	191%	
Declared coefficient of performance or primary energy ratio for part load at indoor temperature 20 °C and outdoor temperature T j			
T j = + 2 °C	COPd or PERd	2.75	– or %
T j = + 7 °C	COPd or PERd	4.00	– or %
T j = + 12 °C	COPd or PERd	6.40	– or %
T j = bivalent temperature	COPd or PERd	2.75	– or %
T j = operation limit temperature	COPd or PERd	2.75	– or %
For air-to-water heat pumps: Tj=-15℃ (if TOL < -20℃)	COPd or PERd	x,xx	– or %
Cycling interval efficiency	COPcyc or PERcyc	x,xx	– or %

Annual electricity consumption (Low Temp)	Q HE, (Low Temp)	2418	kWh
Annual electricity consumption (Mid Temp)	Q HE (Mid Temp)	3578	kWh

Colder climate

Low temperature application

Item	Symbol	Value	Unit
Rated heat output (*)	P_{rated}	16	kW
Declared capacity for heating for part load at indoor temperature 20 °C and outdoor temperature T j			
T j = – 7 °C	P_{dh}	9.4	kW
T j = + 2 °C	P_{dh}	5.7	kW
T j = + 7 °C	P_{dh}	3.7	kW
T j = + 12 °C	P_{dh}	3.7	kW
T j = bivalent temperature	P_{dh}	9.4	kW
T j = operation limit temperature	P_{dh}	10.8	kW
For air-to-water heat pumps: Tj=-15℃ (if TOL < -20℃)	P_{dh}	x,x	kW
Bivalent temperature	T_{biv}	-7	℃
Cycling interval capacity for heating	P_{cych}	x,x	kW
Degradation co-efficient(**)	C_{dh}	0.9	

Item	Symbol	Value	Unit
Seasonal space heating energy efficiency	η_s	152%	
Declared coefficient of performance or primary energy ratio for part load at indoor temperature 20 °C and outdoor temperature T j			
T j = – 7 °C	COPd or PERd	3.42	– or %
T j = + 2 °C	COPd or PERd	5.40	– or %
T j = + 7 °C	COPd or PERd	7.20	– or %
T j = + 12 °C	COPd or PERd	8.70	– or %
T j = bivalent temperature	COPd or PERd	3.42	– or %
T j = operation limit temperature	COPd or PERd	2.80	– or %
For air-to-water heat pumps: Tj=-15℃ (if TOL < -20℃)	COPd or PERd	x,xx	– or %
Cycling interval efficiency	COPcyc or PERcyc	x,xx	– or %

Medium temperature application

Item	Symbol	Value	Unit
Rated heat output (*)	P_{rated}	17	kW
Declared capacity for heating for part load at indoor temperature 20 °C and outdoor temperature T j			
T j = – 7 °C	P_{dh}	10.3	kW
T j = + 2 °C	P_{dh}	6.3	kW
T j = + 7 °C	P_{dh}	4.0	kW
T j = + 12 °C	P_{dh}	3.6	kW
T j = bivalent temperature	P_{dh}	10.3	kW
T j = operation limit temperature	P_{dh}	10.3	kW
For air-to-water heat pumps: Tj=-15℃ (if TOL < -20℃)	P_{dh}	x,x	kW
Bivalent temperature	T_{biv}	-7	℃
Cycling interval capacity for heating	P_{cych}	x,x	kW
Degradation co-efficient(**)	C_{dh}	0.9	

Item	Symbol	Value	Unit
Seasonal space heating energy efficiency	η_s	125%	
Declared coefficient of performance or primary energy ratio for part load at indoor temperature 20 °C and outdoor temperature T j			
T j = – 7 °C	COPd or PERd	2.78	– or %
T j = + 2 °C	COPd or PERd	4.25	– or %
T j = + 7 °C	COPd or PERd	6.00	– or %
T j = + 12 °C	COPd or PERd	7.25	– or %
T j = bivalent temperature	COPd or PERd	2.78	– or %
T j = operation limit temperature	COPd or PERd	2.31	– or %
For air-to-water heat pumps: Tj=-15℃ (if TOL < -20℃)	COPd or PERd	x,xx	– or %
Cycling interval efficiency	COPcyc or PERcyc	x,xx	– or %

Annual electricity consumption (Low Temp)	Q HE, (Low Temp)	9882	kWh
Annual electricity consumption (Mid Temp)	Q HE (Mid Temp)	13091	kWh

Technical parameters for heat pump space heaters and heat pump combination heaters

Model(s):	HM163HF UB60 / PHCS0 ENCXLEU	
Air-to-water heat pump:	YES	~~NO~~
Water-to-water heat pump:	~~YES~~	NO
Brine-to-water heat pump:	~~YES~~	NO
Low-temperature heat pump:	~~YES~~	NO
Equipped with a supplementary heater:	YES	~~NO~~
Heat pump combination heater:	~~YES~~	NO

Parameters shall be declared for medium-temperature application, except for low-temperature heat pumps.
For low- temperature heat pumps, parameters shall be declared for low-temperature application.
Parameters shall be declared for average climate conditions.

Low temperature application

Item	Symbol	Value	Unit
Rated heat output (*)	P_{rated}	12	kW
Declared capacity for heating for part load at indoor temperature 20 °C and outdoor temperature T j			
T j = – 7 °C	P_{dh}	10.4	kW
T j = + 2 °C	P_{dh}	6.3	kW
T j = + 7 °C	P_{dh}	4.1	kW
T j = + 12 °C	P_{dh}	3.7	kW
T j = bivalent temperature	P_{dh}	11.7	kW
T j = operation limit temperature	P_{dh}	11.7	kW
For air-to-water heat pumps: Tj=-15°C (if TOL < -20°C)	P_{dh}	x,x	kW
Bivalent temperature	T_{biv}	-10	°C
Cycling interval capacity for heating	P_{cych}	x,x	kW
Degradation co-efficient(**)	C_{dh}	0.9	

Item	Symbol	Value	Unit
Seasonal space heating energy efficiency	η_s	201%	
Declared coefficient of performance or primary energy ratio for part load at indoor temperature 20 °C and outdoor temperature T j			
T j = – 7 °C	COPd or PERd	3.12	– or %
T j = + 2 °C	COPd or PERd	5.02	– or %
T j = + 7 °C	COPd or PERd	6.70	– or %
T j = + 12 °C	COPd or PERd	8.45	– or %
T j = bivalent temperature	COPd or PERd	2.80	– or %
T j = operation limit temperature	COPd or PERd	2.80	– or %
For air-to-water heat pumps: Tj=-15°C (if TOL < -20°C)	COPd or PERd	x,xx	– or %
Cycling interval efficiency	COPcyc or PERcyc	x,xx	– or %
Heating water operating limit temperature	WTOL	75	°C

Medium temperature application

Item	Symbol	Value	Unit
Rated heat output (*)	P_{rated}	12	kW
Declared capacity for heating for part load at indoor temperature 20 °C and outdoor temperature T j			
T j = – 7 °C	P_{dh}	10.4	kW
T j = + 2 °C	P_{dh}	6.3	kW
T j = + 7 °C	P_{dh}	4.2	kW
T j = + 12 °C	P_{dh}	3.6	kW
T j = bivalent temperature	P_{dh}	10.4	kW
T j = operation limit temperature	P_{dh}	11.4	kW
For air-to-water heat pumps: Tj=-15°C (if TOL < -20°C)	P_{dh}	x,x	kW
Bivalent temperature	T_{biv}	-7	°C
Cycling interval capacity for heating	P_{cych}	x,x	kW
Degradation co-efficient(**)	C_{dh}	0.9	

Item	Symbol	Value	Unit
Seasonal space heating energy efficiency	η_s	154%	
Declared coefficient of performance or primary energy ratio for part load at indoor temperature 20 °C and outdoor temperature T j			
T j = – 7 °C	COPd or PERd	2.34	– or %
T j = + 2 °C	COPd or PERd	3.90	– or %
T j = + 7 °C	COPd or PERd	5.05	– or %
T j = + 12 °C	COPd or PERd	6.75	– or %
T j = bivalent temperature	COPd or PERd	2.34	– or %
T j = operation limit temperature	COPd or PERd	2.30	– or %
For air-to-water heat pumps: Tj=-15°C (if TOL < -20°C)	COPd or PERd	x,xx	– or %
For air -to-water heat pumps: Operation limit temperature	TOL	-15	°C
Cycling interval efficiency	COPcyc or PERcyc	x,xx	– or %
Heating water operating limit temperature	WTOL	75	°C

Power consumption in modes other than active mode			
Off mode	P_{OFF}	0.010	kW
Thermostat-off mode	P_{TO}	0.030	kW
Standby mode	P_{SB}	0.010	kW
Crankcase heater mode	P_{CK}	0.000	kW

Supplementary heater			
Rated heat output (*)	Psup	6.7	kW
Type of energy input		Electric	

Other items			
Capacity control	Variable		
Sound power level, indoors/outdoors	$L_{WA,indoor}$	0	dB
	$L_{WA,Outdoor}$	52	dB
Annual electricity consumption (Low Temp)	Q HE, (Low Temp)	4735	kWh
Annual electricity consumption (Mid Temp)	Q HE (Mid Temp)	6162	kWh

For air-to-water heat pumps: Rated air flow rate, outdoors (Low Temp)		2388	m^3/h
For air-to-water heat pumps: Rated air flow rate, outdoors (Mid. Temp)		3690	m^3/h
For water-/brine-to-water heat pumps: Rated brine or water flow rate, outdoor heat exchanger		x	
Water Pump EEI	≤	0.20	

"The benchmark for the most efficient circulators is EEI ≤ 0,20.";

For heat pump combination heater			
Declared load profile	x		
Daily elecrictiy consumption	Qelec	x.xxx	kWh
Annual electricity consumption	AEC	x	kWh

Water heating energy efficiency	η_{wh}	x	%
Daily fuel consumption	Qfuel	x,xxx	kWh
Annual fuel consumption	AFC	x	GJ

Contact details

Name : Christianna Papazahariou
Position : Head of EU Engineering Centre and Business Strategy AS
E-mail address : chris.papazahariou@lge.com Tel. 01 49 89 57 41 - 06 83 077 455
Postal address : LG Electronics 25, quai du Président Paul Doumer 92400 Courbevoie
www.lg.com

(*) For heat pump space heaters and heat pump combination heaters, the rated heat output Prated is equal to the design load for heating Pdesignh, and the rated heat output of a supplementary heater Psup is equal to the supplementary capacity for heating sup(Tj).

(**) If Cdh is not determined by measurement then the default degradation coefficient is Cdh = 0,9.

Warmer climate

Low temperature application

Item	Symbol	Value	Unit
Rated heat output (*)	P_{rated}	12	kW
Declared capacity for heating for part load at indoor temperature 20 °C and outdoor temperature T j			
T j = + 2 °C	P_{dh}	11.5	kW
T j = + 7 °C	P_{dh}	7.4	kW
T j = + 12 °C	P_{dh}	3.3	kW
T j = bivalent temperature	P_{dh}	11.5	kW
T j = operation limit temperature	P_{dh}	11.5	kW
For air-to-water heat pumps: Tj=-15°C (if TOL < -20°C)	P_{dh}	x,x	kW
Bivalent temperature	T_{biv}	2	°C
Cycling interval capacity for heating	P_{cych}	x,x	kW
Degradation co-efficient(**)	C_{dh}	0.9	

Item	Symbol	Value	Unit
Seasonal space heating energy efficiency	η_s	251%	
Declared coefficient of performance or primary energy ratio for part load at indoor temperature 20 °C and outdoor temperature T j			
T j = + 2 °C	COPd or PERd	3.70	– or %
T j = + 7 °C	COPd or PERd	5.80	– or %
T j = + 12 °C	COPd or PERd	7.60	– or %
T j = bivalent temperature	COPd or PERd	3.70	– or %
T j = operation limit temperature	COPd or PERd	3.70	– or %
For air-to-water heat pumps: Tj=-15°C (if TOL < -20°C)	COPd or PERd	x,xx	– or %
Cycling interval efficiency	COPcyc or PERcyc	x,xx	– or %

Medium temperature application

Item	Symbol	Value	Unit
Rated heat output (*)	P_{rated}	13	kW
Declared capacity for heating for part load at indoor temperature 20 °C and outdoor temperature T j			
T j = + 2 °C	P_{dh}	13.0	kW
T j = + 7 °C	P_{dh}	8.4	kW
T j = + 12 °C	P_{dh}	3.7	kW
T j = bivalent temperature	P_{dh}	13.0	kW
T j = operation limit temperature	P_{dh}	13.0	kW
For air-to-water heat pumps: Tj=-15°C (if TOL < -20°C)	P_{dh}	x,x	kW
Bivalent temperature	T_{biv}	2	°C
Cycling interval capacity for heating	P_{cych}	x,x	kW
Degradation co-efficient(**)	C_{dh}	0.9	

Item	Symbol	Value	Unit
Seasonal space heating energy efficiency	η_s	191%	
Declared coefficient of performance or primary energy ratio for part load at indoor temperature 20 °C and outdoor temperature T j			
T j = + 2 °C	COPd or PERd	2.75	– or %
T j = + 7 °C	COPd or PERd	4.00	– or %
T j = + 12 °C	COPd or PERd	6.40	– or %
T j = bivalent temperature	COPd or PERd	2.75	– or %
T j = operation limit temperature	COPd or PERd	2.75	– or %
For air-to-water heat pumps: Tj=-15°C (if TOL < -20°C)	COPd or PERd	x,xx	– or %
Cycling interval efficiency	COPcyc or PERcyc	x,xx	– or %

Annual electricity consumption (Low Temp)	Q HE, (Low Temp)	2418	kWh
Annual electricity consumption (Mid Temp)	Q HE (Mid Temp)	3578	kWh

Colder climate

Low temperature application

Item	Symbol	Value	Unit
Rated heat output (*)	P_{rated}	16	kW
Declared capacity for heating for part load at indoor temperature 20 °C and outdoor temperature T j			
T j = – 7 °C	P_{dh}	9.4	kW
T j = + 2 °C	P_{dh}	5.7	kW
T j = + 7 °C	P_{dh}	3.7	kW
T j = + 12 °C	P_{dh}	3.7	kW
T j = bivalent temperature	P_{dh}	9.4	kW
T j = operation limit temperature	P_{dh}	10.8	kW
For air-to-water heat pumps: Tj=-15°C (if TOL < -20°C)	P_{dh}	x,x	kW
Bivalent temperature	T_{biv}	-7	°C
Cycling interval capacity for heating	P_{cych}	x,x	kW
Degradation co-efficient(**)	C_{dh}	0.9	

Item	Symbol	Value	Unit
Seasonal space heating energy efficiency	η_s	152%	
Declared coefficient of performance or primary energy ratio for part load at indoor temperature 20 °C and outdoor temperature T j			
T j = – 7 °C	COPd or PERd	3.42	– or %
T j = + 2 °C	COPd or PERd	5.40	– or %
T j = + 7 °C	COPd or PERd	7.20	– or %
T j = + 12 °C	COPd or PERd	8.70	– or %
T j = bivalent temperature	COPd or PERd	3.42	– or %
T j = operation limit temperature	COPd or PERd	2.80	– or %
For air-to-water heat pumps: Tj=-15°C (if TOL < -20°C)	COPd or PERd	x,xx	– or %
Cycling interval efficiency	COPcyc or PERcyc	x,xx	– or %

Medium temperature application

Item	Symbol	Value	Unit
Rated heat output (*)	P_{rated}	17	kW
Declared capacity for heating for part load at indoor temperature 20 °C and outdoor temperature T j			
T j = – 7 °C	P_{dh}	10.3	kW
T j = + 2 °C	P_{dh}	6.3	kW
T j = + 7 °C	P_{dh}	4.0	kW
T j = + 12 °C	P_{dh}	3.6	kW
T j = bivalent temperature	P_{dh}	10.3	kW
T j = operation limit temperature	P_{dh}	10.3	kW
For air-to-water heat pumps: Tj=-15°C (if TOL < -20°C)	P_{dh}	x,x	kW
Bivalent temperature	T_{biv}	-7	°C
Cycling interval capacity for heating	P_{cych}	x,x	kW
Degradation co-efficient(**)	C_{dh}	0.9	

Item	Symbol	Value	Unit
Seasonal space heating energy efficiency	η_s	125%	
Declared coefficient of performance or primary energy ratio for part load at indoor temperature 20 °C and outdoor temperature T j			
T j = – 7 °C	COPd or PERd	2.78	– or %
T j = + 2 °C	COPd or PERd	4.25	– or %
T j = + 7 °C	COPd or PERd	6.00	– or %
T j = + 12 °C	COPd or PERd	7.25	– or %
T j = bivalent temperature	COPd or PERd	2.78	– or %
T j = operation limit temperature	COPd or PERd	2.31	– or %
For air-to-water heat pumps: Tj=-15°C (if TOL < -20°C)	COPd or PERd	x,xx	– or %
Cycling interval efficiency	COPcyc or PERcyc	x,xx	– or %

Annual electricity consumption (Low Temp)	Q HE, (Low Temp)	9882	kWh
Annual electricity consumption (Mid Temp)	Q HE (Mid Temp)	13091	kWh

Technical parameters for heat pump space heaters and heat pump combination heaters

Model(s):	HM163HF UB60 / HN1639HC NK0 / OSHW-200F AEU	
Air-to-water heat pump:	YES	~~NO~~
Water-to-water heat pump:	~~YES~~	NO
Brine-to-water heat pump:	~~YES~~	NO
Low-temperature heat pump:	~~YES~~	NO
Equipped with a supplementary heater:	YES	~~NO~~
Heat pump combination heater:	~~YES~~	NO

Parameters shall be declared for medium-temperature application, except for low-temperature heat pumps.
For low- temperature heat pumps, parameters shall be declared for low-temperature application.
Parameters shall be declared for average climate conditions.

Low temperature application

Item	Symbol	Value	Unit
Rated heat output (*)	P_{rated}	12	kW
Declared capacity for heating for part load at indoor temperature 20 °C and outdoor temperature T j			
T j = – 7 °C	P_{dh}	10.4	kW
T j = + 2 °C	P_{dh}	6.3	kW
T j = + 7 °C	P_{dh}	4.1	kW
T j = + 12 °C	P_{dh}	3.7	kW
T j = bivalent temperature	P_{dh}	11.7	kW
T j = operation limit temperature	P_{dh}	11.7	kW
For air-to-water heat pumps: Tj=-15℃ (if TOL < -20℃)	P_{dh}	x,x	kW
Bivalent temperature	T_{biv}	-10	℃
Cycling interval capacity for heating	P_{cych}	x,x	kW
Degradation co-efficient(**)	C_{dh}	0.9	

Item	Symbol	Value	Unit
Seasonal space heating energy efficiency	η_s	201%	
Declared coefficient of performance or primary energy ratio for part load at indoor temperature 20 °C and outdoor temperature T j			
T j = – 7 °C	COPd or PERd	3.12	– or %
T j = + 2 °C	COPd or PERd	5.02	– or %
T j = + 7 °C	COPd or PERd	6.70	– or %
T j = + 12 °C	COPd or PERd	8.45	– or %
T j = bivalent temperature	COPd or PERd	2.80	– or %
T j = operation limit temperature	COPd or PERd	2.80	– or %
For air-to-water heat pumps: Tj=-15℃ (if TOL < -20℃)	COPd or PERd	x,xx	– or %
Cycling interval efficiency	COPcyc or PERcyc	x,xx	– or %
Heating water operating limit temperature	WTOL	75	℃

Medium temperature application

Item	Symbol	Value	Unit
Rated heat output (*)	P_{rated}	12	kW
Declared capacity for heating for part load at indoor temperature 20 °C and outdoor temperature T j			
T j = – 7 °C	P_{dh}	10.4	kW
T j = + 2 °C	P_{dh}	6.3	kW
T j = + 7 °C	P_{dh}	4.2	kW
T j = + 12 °C	P_{dh}	3.6	kW
T j = bivalent temperature	P_{dh}	10.4	kW
T j = operation limit temperature	P_{dh}	11.4	kW
For air-to-water heat pumps: Tj=-15℃ (if TOL < -20℃)	P_{dh}	x,x	kW
Bivalent temperature	T_{biv}	-7	℃
Cycling interval capacity for heating	P_{cych}	x,x	kW
Degradation co-efficient(**)	C_{dh}	0.9	

Item	Symbol	Value	Unit
Seasonal space heating energy efficiency	η_s	154%	
Declared coefficient of performance or primary energy ratio for part load at indoor temperature 20 °C and outdoor temperature T j			
T j = – 7 °C	COPd or PERd	2.34	– or %
T j = + 2 °C	COPd or PERd	3.90	– or %
T j = + 7 °C	COPd or PERd	5.05	– or %
T j = + 12 °C	COPd or PERd	6.75	– or %
T j = bivalent temperature	COPd or PERd	2.34	– or %
T j = operation limit temperature	COPd or PERd	2.30	– or %
For air-to-water heat pumps: Tj=-15℃ (if TOL < -20℃)	COPd or PERd	x,xx	– or %
For air -to-water heat pumps: Operation limit temperature	TOL	-15	℃
Cycling interval efficiency	COPcyc or PERcyc	x,xx	– or %
Heating water operating limit temperature	WTOL	75	℃

Power consumption in modes other than active mode			
Off mode	P_{OFF}	0.010	kW
Thermostat-off mode	P_{TO}	0.030	kW
Standby mode	P_{SB}	0.010	kW
Crankcase heater mode	P_{CK}	0.000	kW

Supplementary heater			
Rated heat output (*)	Psup	6.7	kW
Type of energy input		Electric	

Other items			
Capacity control		Variable	
Sound power level, indoors/outdoors	$L_{WA,indoor}$	39	dB
	$L_{WA,Outdoor}$	52	dB
Annual electricity consumption (Low Temp)	Q HE, (Low Temp)	4735	kWh
Annual electricity consumption (Mid Temp)	Q HE (Mid Temp)	6162	kWh

For air-to-water heat pumps: Rated air flow rate, outdoors (Low Temp)		2388	m^3/h
For air-to-water heat pumps: Rated air flow rate, outdoors (Mid. Temp)		3690	m^3/h
For water-/brine-to-water heat pumps: Rated brine or water flow rate, outdoor heat exchanger		x	
Water Pump EEI	≤	0.20	

"The benchmark for the most efficient circulators is EEI ≤ 0,20.";

For heat pump combination heater			
Declared load profile		L	
Daily elecrictiy consumption	Qelec	3.753	kWh
Annual electricity consumption	AEC	808	kWh

Water heating energy efficiency	η_{wh}	127%	%
Daily fuel consumption	Qfuel	x,xxx	kWh
Annual fuel consumption	AFC	x	GJ

Contact details

Name : Christianna Papazahariou
Position : Head of EU Engineering Centre and Business Strategy AS
E-mail address : chris.papazahariou@lge.com Tel. 01 49 89 57 41 – 06 83 077 455
Postal address : LG Electronics 25, quai du Président Paul Doumer 92400 Courbevoie
www.lg.com

(*) For heat pump space heaters and heat pump combination heaters, the rated heat output Prated is equal to the design load for heating Pdesignh, and the rated heat output of a supplementary heater Psup is equal to the supplementary capacity for heating sup(Tj).

(**) If Cdh is not determined by measurement then the default degradation coefficient is Cdh = 0,9.

Warmer climate

Low temperature application

Item	Symbol	Value	Unit
Rated heat output (*)	P_{rated}	12	kW
Declared capacity for heating for part load at indoor temperature 20 °C and outdoor temperature T j			
T j = + 2 °C	P_{dh}	11.5	kW
T j = + 7 °C	P_{dh}	7.4	kW
T j = + 12 °C	P_{dh}	3.3	kW
T j = bivalent temperature	P_{dh}	11.5	kW
T j = operation limit temperature	P_{dh}	11.5	kW
For air-to-water heat pumps: Tj=-15℃ (if TOL < -20℃)	P_{dh}	x,x	kW
Bivalent temperature	T_{biv}	2	℃
Cycling interval capacity for heating	P_{cych}	x,x	kW
Degradation co-efficient(**)	C_{dh}	0.9	

Item	Symbol	Value	Unit
Seasonal space heating energy efficiency	η_s	251%	
Declared coefficient of performance or primary energy ratio for part load at indoor temperature 20 °C and outdoor temperature T j			
T j = + 2 °C	COPd or PERd	3.70	– or %
T j = + 7 °C	COPd or PERd	5.80	– or %
T j = + 12 °C	COPd or PERd	7.60	– or %
T j = bivalent temperature	COPd or PERd	3.70	– or %
T j = operation limit temperature	COPd or PERd	3.70	– or %
For air-to-water heat pumps: Tj=-15℃ (if TOL < -20℃)	COPd or PERd	x,xx	– or %
Cycling interval efficiency	COPcyc or PERcyc	x,xx	– or %

Medium temperature application

Item	Symbol	Value	Unit
Rated heat output (*)	P_{rated}	13	kW
Declared capacity for heating for part load at indoor temperature 20 °C and outdoor temperature T j			
T j = + 2 °C	P_{dh}	13.0	kW
T j = + 7 °C	P_{dh}	8.4	kW
T j = + 12 °C	P_{dh}	3.7	kW
T j = bivalent temperature	P_{dh}	13.0	kW
T j = operation limit temperature	P_{dh}	13.0	kW
For air-to-water heat pumps: Tj=-15℃ (if TOL < -20℃)	P_{dh}	x,x	kW
Bivalent temperature	T_{biv}	2	℃
Cycling interval capacity for heating	P_{cych}	x,x	kW
Degradation co-efficient(**)	C_{dh}	0.9	

Item	Symbol	Value	Unit
Seasonal space heating energy efficiency	η_s	191%	
Declared coefficient of performance or primary energy ratio for part load at indoor temperature 20 °C and outdoor temperature T j			
T j = + 2 °C	COPd or PERd	2.75	– or %
T j = + 7 °C	COPd or PERd	4.00	– or %
T j = + 12 °C	COPd or PERd	6.40	– or %
T j = bivalent temperature	COPd or PERd	2.75	– or %
T j = operation limit temperature	COPd or PERd	2.75	– or %
For air-to-water heat pumps: Tj=-15℃ (if TOL < -20℃)	COPd or PERd	x,xx	– or %
Cycling interval efficiency	COPcyc or PERcyc	x,xx	– or %

Annual electricity consumption (Low Temp)	Q HE, (Low Temp)	2418	kWh
Annual electricity consumption (Mid Temp)	Q HE (Mid Temp)	3578	kWh

Colder climate

Low temperature application

Item	Symbol	Value	Unit
Rated heat output (*)	P_{rated}	16	kW
Declared capacity for heating for part load at indoor temperature 20 °C and outdoor temperature T j			
T j = – 7 °C	P_{dh}	9.4	kW
T j = + 2 °C	P_{dh}	5.7	kW
T j = + 7 °C	P_{dh}	3.7	kW
T j = + 12 °C	P_{dh}	3.7	kW
T j = bivalent temperature	P_{dh}	9.4	kW
T j = operation limit temperature	P_{dh}	10.8	kW
For air-to-water heat pumps: Tj=-15℃ (if TOL < -20℃)	P_{dh}	x,x	kW
Bivalent temperature	T_{biv}	-7	℃
Cycling interval capacity for heating	P_{cych}	x,x	kW
Degradation co-efficient(**)	C_{dh}	0.9	

Item	Symbol	Value	Unit
Seasonal space heating energy efficiency	η_s	152%	
Declared coefficient of performance or primary energy ratio for part load at indoor temperature 20 °C and outdoor temperature T j			
T j = – 7 °C	COPd or PERd	3.42	– or %
T j = + 2 °C	COPd or PERd	5.40	– or %
T j = + 7 °C	COPd or PERd	7.20	– or %
T j = + 12 °C	COPd or PERd	8.70	– or %
T j = bivalent temperature	COPd or PERd	3.42	– or %
T j = operation limit temperature	COPd or PERd	2.80	– or %
For air-to-water heat pumps: Tj=-15℃ (if TOL < -20℃)	COPd or PERd	x,xx	– or %
Cycling interval efficiency	COPcyc or PERcyc	x,xx	– or %

Medium temperature application

Item	Symbol	Value	Unit
Rated heat output (*)	P_{rated}	17	kW
Declared capacity for heating for part load at indoor temperature 20 °C and outdoor temperature T j			
T j = – 7 °C	P_{dh}	10.3	kW
T j = + 2 °C	P_{dh}	6.3	kW
T j = + 7 °C	P_{dh}	4.0	kW
T j = + 12 °C	P_{dh}	3.6	kW
T j = bivalent temperature	P_{dh}	10.3	kW
T j = operation limit temperature	P_{dh}	10.3	kW
For air-to-water heat pumps: Tj=-15℃ (if TOL < -20℃)	P_{dh}	x,x	kW
Bivalent temperature	T_{biv}	-7	℃
Cycling interval capacity for heating	P_{cych}	x,x	kW
Degradation co-efficient(**)	C_{dh}	0.9	

Item	Symbol	Value	Unit
Seasonal space heating energy efficiency	η_s	125%	
Declared coefficient of performance or primary energy ratio for part load at indoor temperature 20 °C and outdoor temperature T j			
T j = – 7 °C	COPd or PERd	2.78	– or %
T j = + 2 °C	COPd or PERd	4.25	– or %
T j = + 7 °C	COPd or PERd	6.00	– or %
T j = + 12 °C	COPd or PERd	7.25	– or %
T j = bivalent temperature	COPd or PERd	2.78	– or %
T j = operation limit temperature	COPd or PERd	2.31	– or %
For air-to-water heat pumps: Tj=-15℃ (if TOL < -20℃)	COPd or PERd	x,xx	– or %
Cycling interval efficiency	COPcyc or PERcyc	x,xx	– or %

Annual electricity consumption (Low Temp)	Q HE, (Low Temp)	9882	kWh
Annual electricity consumption (Mid Temp)	Q HE (Mid Temp)	13091	kWh

Technical parameters for heat pump space heaters and heat pump combination heaters

Model(s):	HM163HF UB60	
Air-to-water heat pump:	YES	~~NO~~
Water-to-water heat pump:	~~YES~~	NO
Brine-to-water heat pump:	~~YES~~	NO
Low-temperature heat pump:	~~YES~~	NO
Equipped with a supplementary heater:	YES	~~NO~~
Heat pump combination heater:	~~YES~~	NO

Parameters shall be declared for medium-temperature application, except for low-temperature heat pumps.
For low- temperature heat pumps, parameters shall be declared for low-temperature application.
Parameters shall be declared for average climate conditions.

Low temperature application

Item	Symbol	Value	Unit
Rated heat output (*)	P_{rated}	12	kW
Declared capacity for heating for part load at indoor temperature 20 °C and outdoor temperature T j			
T j = – 7 °C	P_{dh}	10.4	kW
T j = + 2 °C	P_{dh}	6.3	kW
T j = + 7 °C	P_{dh}	4.1	kW
T j = + 12 °C	P_{dh}	3.7	kW
T j = bivalent temperature	P_{dh}	11.7	kW
T j = operation limit temperature	P_{dh}	11.7	kW
For air-to-water heat pumps: Tj=-15°C (if TOL < -20°C)	P_{dh}	x,x	kW
Bivalent temperature	T_{biv}	-10	°C
Cycling interval capacity for heating	P_{cych}	x,x	kW
Degradation co-efficient(**)	C_{dh}	0.9	

Item	Symbol	Value	Unit
Seasonal space heating energy efficiency	η_s	201%	
Declared coefficient of performance or primary energy ratio for part load at indoor temperature 20 °C and outdoor temperature T j			
T j = – 7 °C	COPd or PERd	3.12	– or %
T j = + 2 °C	COPd or PERd	5.02	– or %
T j = + 7 °C	COPd or PERd	6.70	– or %
T j = + 12 °C	COPd or PERd	8.45	– or %
T j = bivalent temperature	COPd or PERd	2.80	– or %
T j = operation limit temperature	COPd or PERd	2.80	– or %
For air-to-water heat pumps: Tj=-15°C (if TOL < -20°C)	COPd or PERd	x,xx	– or %
Cycling interval efficiency	COPcyc or PERcyc	x,xx	– or %
Heating water operating limit temperature	WTOL	75	°C

Medium temperature application

Item	Symbol	Value	Unit
Rated heat output (*)	P_{rated}	12	kW
Declared capacity for heating for part load at indoor temperature 20 °C and outdoor temperature T j			
T j = – 7 °C	P_{dh}	10.4	kW
T j = + 2 °C	P_{dh}	6.3	kW
T j = + 7 °C	P_{dh}	4.2	kW
T j = + 12 °C	P_{dh}	3.6	kW
T j = bivalent temperature	P_{dh}	10.4	kW
T j = operation limit temperature	P_{dh}	11.4	kW
For air-to-water heat pumps: Tj=-15°C (if TOL < -20°C)	P_{dh}	x,x	kW
Bivalent temperature	T_{biv}	-7	°C
Cycling interval capacity for heating	P_{cych}	x,x	kW
Degradation co-efficient(**)	C_{dh}	0.9	

Item	Symbol	Value	Unit
Seasonal space heating energy efficiency	η_s	154%	
Declared coefficient of performance or primary energy ratio for part load at indoor temperature 20 °C and outdoor temperature T j			
T j = – 7 °C	COPd or PERd	2.34	– or %
T j = + 2 °C	COPd or PERd	3.90	– or %
T j = + 7 °C	COPd or PERd	5.05	– or %
T j = + 12 °C	COPd or PERd	6.75	– or %
T j = bivalent temperature	COPd or PERd	2.34	– or %
T j = operation limit temperature	COPd or PERd	2.30	– or %
For air-to-water heat pumps: Tj=-15°C (if TOL < -20°C)	COPd or PERd	x,xx	– or %
For air -to-water heat pumps: Operation limit temperature	TOL	-15	°C
Cycling interval efficiency	COPcyc or PERcyc	x,xx	– or %
Heating water operating limit temperature	WTOL	75	°C

Power consumption in modes other than active mode			
Off mode	P_{OFF}	0.010	kW
Thermostat-off mode	P_{TO}	0.030	kW
Standby mode	P_{SB}	0.010	kW
Crankcase heater mode	P_{CK}	0.000	kW

Supplementary heater			
Rated heat output (*)	Psup	6.7	kW
Type of energy input		Electric	

Other items			
Capacity control	Variable		
Sound power level, indoors/outdoors	$L_{WA,indoor}$	-	dB
	$L_{WA,Outdoor}$	52	dB
Annual electricity consumption (Low Temp)	Q HE, (Low Temp)	4735	kWh
Annual electricity consumption (Mid Temp)	Q HE (Mid Temp)	6162	kWh

For air-to-water heat pumps: Rated air flow rate, outdoors (Low Temp)		2388	m^3/h
For air-to-water heat pumps: Rated air flow rate, outdoors (Mid. Temp)		3690	m^3/h
For water-/brine-to-water heat pumps: Rated brine or water flow rate, outdoor heat exchanger		x	
Water Pump EEI	≤	0.20	

"The benchmark for the most efficient circulators is EEI ≤ 0,20.";

For heat pump combination heater			
Declared load profile	x		
Daily elecrictiy consumption	Qelec	x.xxx	kWh
Annual electricity consumption	AEC	x	kWh

Water heating energy efficiency	η_{wh}	x	%
Daily fuel consumption	Qfuel	x,xxx	kWh
Annual fuel consumption	AFC	x	GJ

Contact details

Name : Christianna Papazahariou
Position : Head of EU Engineering Centre and Business Strategy AS
E-mail address : chris.papazahariou@lge.com Tel. 01 49 89 57 41 - 06 83 077 455
Postal address : LG Electronics 25, quai du Président Paul Doumer 92400 Courbevoie
www.lg.com

(*) For heat pump space heaters and heat pump combination heaters, the rated heat output Prated is equal to the design load for heating Pdesignh, and the rated heat output of a supplementary heater Psup is equal to the supplementary capacity for heating sup(Tj).

(**) If Cdh is not determined by measurement then the default degradation coefficient is Cdh = 0,9.

Warmer climate

Low temperature application

Item	Symbol	Value	Unit
Rated heat output (*)	P_{rated}	12	kW
Declared capacity for heating for part load at indoor temperature 20 °C and outdoor temperature T j			
T j = + 2 °C	P_{dh}	11.5	kW
T j = + 7 °C	P_{dh}	7.4	kW
T j = + 12 °C	P_{dh}	3.3	kW
T j = bivalent temperature	P_{dh}	11.5	kW
T j = operation limit temperature	P_{dh}	11.5	kW
For air-to-water heat pumps: Tj=-15°C (if TOL < -20°C)	P_{dh}	x,x	kW
Bivalent temperature	T_{biv}	2	°C
Cycling interval capacity for heating	P_{cych}	x,x	kW
Degradation co-efficient(**)	C_{dh}	0.9	

Item	Symbol	Value	Unit
Seasonal space heating energy efficiency	η_s	251%	
Declared coefficient of performance or primary energy ratio for part load at indoor temperature 20 °C and outdoor temperature T j			
T j = + 2 °C	COPd or PERd	3.70	– or %
T j = + 7 °C	COPd or PERd	5.80	– or %
T j = + 12 °C	COPd or PERd	7.60	– or %
T j = bivalent temperature	COPd or PERd	3.70	– or %
T j = operation limit temperature	COPd or PERd	3.70	– or %
For air-to-water heat pumps: Tj=-15°C (if TOL < -20°C)	COPd or PERd	x,xx	– or %
Cycling interval efficiency	COPcyc or PERcyc	x,xx	– or %

Medium temperature application

Item	Symbol	Value	Unit
Rated heat output (*)	P_{rated}	13	kW
Declared capacity for heating for part load at indoor temperature 20 °C and outdoor temperature T j			
T j = + 2 °C	P_{dh}	13.0	kW
T j = + 7 °C	P_{dh}	8.4	kW
T j = + 12 °C	P_{dh}	3.7	kW
T j = bivalent temperature	P_{dh}	13.0	kW
T j = operation limit temperature	P_{dh}	13.0	kW
For air-to-water heat pumps: Tj=-15°C (if TOL < -20°C)	P_{dh}	x,x	kW
Bivalent temperature	T_{biv}	2	°C
Cycling interval capacity for heating	P_{cych}	x,x	kW
Degradation co-efficient(**)	C_{dh}	0.9	

Item	Symbol	Value	Unit
Seasonal space heating energy efficiency	η_s	191%	
Declared coefficient of performance or primary energy ratio for part load at indoor temperature 20 °C and outdoor temperature T j			
T j = + 2 °C	COPd or PERd	2.75	– or %
T j = + 7 °C	COPd or PERd	4.00	– or %
T j = + 12 °C	COPd or PERd	6.40	– or %
T j = bivalent temperature	COPd or PERd	2.75	– or %
T j = operation limit temperature	COPd or PERd	2.75	– or %
For air-to-water heat pumps: Tj=-15°C (if TOL < -20°C)	COPd or PERd	x,xx	– or %
Cycling interval efficiency	COPcyc or PERcyc	x,xx	– or %

Annual electricity consumption (Low Temp)	Q HE, (Low Temp)	2418	kWh
Annual electricity consumption (Mid Temp)	Q HE (Mid Temp)	3578	kWh

Colder climate

Low temperature application

Item	Symbol	Value	Unit
Rated heat output (*)	P_{rated}	16	kW
Declared capacity for heating for part load at indoor temperature 20 °C and outdoor temperature T j			
T j = – 7 °C	P_{dh}	9.4	kW
T j = + 2 °C	P_{dh}	5.7	kW
T j = + 7 °C	P_{dh}	3.7	kW
T j = + 12 °C	P_{dh}	3.7	kW
T j = bivalent temperature	P_{dh}	9.4	kW
T j = operation limit temperature	P_{dh}	10.8	kW
For air-to-water heat pumps: Tj=-15°C (if TOL < -20°C)	P_{dh}	x,x	kW
Bivalent temperature	T_{biv}	-7	°C
Cycling interval capacity for heating	P_{cych}	x,x	kW
Degradation co-efficient(**)	C_{dh}	0.9	

Item	Symbol	Value	Unit
Seasonal space heating energy efficiency	η_s	152%	
Declared coefficient of performance or primary energy ratio for part load at indoor temperature 20 °C and outdoor temperature T j			
T j = – 7 °C	COPd or PERd	3.42	– or %
T j = + 2 °C	COPd or PERd	5.40	– or %
T j = + 7 °C	COPd or PERd	7.20	– or %
T j = + 12 °C	COPd or PERd	8.70	– or %
T j = bivalent temperature	COPd or PERd	3.42	– or %
T j = operation limit temperature	COPd or PERd	2.80	– or %
For air-to-water heat pumps: Tj=-15°C (if TOL < -20°C)	COPd or PERd	x,xx	– or %
Cycling interval efficiency	COPcyc or PERcyc	x,xx	– or %

Medium temperature application

Item	Symbol	Value	Unit
Rated heat output (*)	P_{rated}	17	kW
Declared capacity for heating for part load at indoor temperature 20 °C and outdoor temperature T j			
T j = – 7 °C	P_{dh}	10.3	kW
T j = + 2 °C	P_{dh}	6.3	kW
T j = + 7 °C	P_{dh}	4.0	kW
T j = + 12 °C	P_{dh}	3.6	kW
T j = bivalent temperature	P_{dh}	10.3	kW
T j = operation limit temperature	P_{dh}	10.3	kW
For air-to-water heat pumps: Tj=-15°C (if TOL < -20°C)	P_{dh}	x,x	kW
Bivalent temperature	T_{biv}	-7	°C
Cycling interval capacity for heating	P_{cych}	x,x	kW
Degradation co-efficient(**)	C_{dh}	0.9	

Item	Symbol	Value	Unit
Seasonal space heating energy efficiency	η_s	125%	
Declared coefficient of performance or primary energy ratio for part load at indoor temperature 20 °C and outdoor temperature T j			
T j = – 7 °C	COPd or PERd	2.78	– or %
T j = + 2 °C	COPd or PERd	4.25	– or %
T j = + 7 °C	COPd or PERd	6.00	– or %
T j = + 12 °C	COPd or PERd	7.25	– or %
T j = bivalent temperature	COPd or PERd	2.78	– or %
T j = operation limit temperature	COPd or PERd	2.31	– or %
For air-to-water heat pumps: Tj=-15°C (if TOL < -20°C)	COPd or PERd	x,xx	– or %
Cycling interval efficiency	COPcyc or PERcyc	x,xx	– or %

Annual electricity consumption (Low Temp)	Q HE, (Low Temp)	9882	kWh
Annual electricity consumption (Mid Temp)	Q HE (Mid Temp)	13091	kWh

SAFETY INSTRUCTIONS

READ ALL INSTRUCTIONS BEFORE USE

The following safety guidelines are intended to prevent unforeseen risks or damage from unsafe or incorrect operation of the appliance.

Safety Messages

This symbol is displayed to indicate matters and operations that can cause risk.
Read the part with this symbol carefully and follow the instructions in order to avoid risk.

WARNING

This indicates that the failure to follow the instructions can cause serious injury or death.

CAUTION

This indicates that the failure to follow the instructions can cause the minor injury or damage to the product.

Notes for Flammable Refrigerant

The following symbols are displayed on units.

This symbol indicates that this appliance uses a flammable refrigerant. If the refrigerant is leaked and exposed to an external ignition source, there is a risk of fire.

This symbol indicates that the Owner's Manual should be read carefully.

This symbol indicates that service personnel should be handling this equipment with reference to the Installation Manual.

This symbol indicates that information is available in the Owner's Manual or Installation Manual.

WARNING INSTRUCTIONS

⚠ WARNING

- To reduce the risk of explosion, fire, death, electric shock, injury or scalding to persons when using this product, follow basic precautions, including the following:

Installation

- Do not use a defective or underrated circuit breaker. Use this appliance on a dedicated circuit.
  - There is risk of fire or electric shock.
- For electrical work, contact the dealer, seller, a qualified electrician, or an Authorized Service Center.
  - There is risk of fire or electric shock.
- Always ground the unit.
  - There is risk of fire or electric shock.
- Install the panel and the cover of control box securely.
  - There is risk of fire or electric shock.
- Always install a dedicated circuit and breaker.
  - Improper wiring or installation may cause fire or electric shock.
- Use the correctly rated breaker or fuse.
  - There is risk of fire or electric.
- Do not modify or extend the power cable.
  - There is risk of fire or electric shock.
- Do not install, remove, change, inspection and maintenance, repair or reinstall the unit by yourself (customer).
  - There is risk of fire, electric shock, explosion, or injury.
- Do not change, remove the safety devices.
  - There is risk of death, injury.

- For antifreeze, always contact the dealer or an authorized service center.
  - Almost the antifreeze is a toxic product.
- For installation, always contact the dealer or an authorized Service Center.
  - There is risk of fire, electric shock, explosion, or injury.
- Do not install the unit on a defective installation stand.
  - It may cause injury, accident, or damage to the unit.
- Be sure the installation area does not deteriorate with age.
  - If the base collapses, the unit could fall with it, causing property damage, unit failure, and personal injury.
- Do not install the water pipe system as Open loop type.
  - It may cause failure of unit.
- Use a vacuum pump or inert (nitrogen) gas when doing leakage test or purging air. Do not compress air or oxygen and do not use flammable gases.
  - There is the risk of death, injury, fire or explosion.
- Make sure the connected condition of connector in product after maintenance.
  - Otherwise, it may cause product damage.
- Do not touch leaked refrigerant directly.
  - There is risk of frostbite.
- Copper in contact with refrigerants shall be oxygen-free or deoxidized, for example Cu-DHP as specified in EN 12735-1 and EN 12735-2.
- Compliance with national gas regulations shall be observed.
- Refrigerant tubing shall be protected or enclosed to avoid damage.
- The installation of pipe-work shall be kept to a minimum.
- A brazed, welded, or mechanical connection shall be made before opening the valves to permit refrigerant to flow between the refrigerating system parts.

- Any person who is involved with working on or breaking into a refrigerant circuit should hold a current valid certificate from an industry-accredited assessment authority, which authorises their competence to handle refrigerants safely in accordance with an industry recognised assessment specification. (Include the corresponding tools and required personal protective equipment)
- Any person who is involved with working on or breaking into a refrigerant circuit wear appropriate protective equipment and have a fire extingusher available.
- Do not use means to accelerate the defrosting process or to clean, other than those recommended by the manufacturer.
- Do not pierce or burn.
- Be aware that refrigerants may not contain an odour.
- Dismantling the unit, treatment of the refrigerant oil and eventual parts should be done in accordance with local and national standards.
- Flexible refrigerant connectors (such as connecting lines between the indoor and outdoor unit) that may be displaced during normal operations shall be protected against mechanical damage.
- Pipe-work shall be protected from physical damage.
- Mechanical connections (mechanical connectors or flared joints) shall be accessible for maintenance purposes.
- Connect the water for filling or refilling the heating system as specified by EN 1717/EN 61770 to avoid contamination of drinking water by return flow.
- The appliance shall be installed in accordance with the national wiring regulation.
- Make sure installation necessary safety devices.
- Do not let refrigerant enter the sewage system.
- Always check for gas (refrigerant) leakage before installation or repair of unit by using the gas sniffer (Gas sniffer must be suitable for R290).
  - There is risk of explosion or fire and failure of unit.

Operation

- Take care to ensure that power cable could not be pulled out or damaged during operation.
  - There is risk of fire or electric shock.
- Do not place anything on the power cable.
  - There is risk of fire or electric shock.
- Do not plug or unplug the power supply plug during operation.
  - There is risk of fire or electric shock.
- Do not touch (operate) the unit with wet hands.
  - There is risk of fire or electric shock.
- Do not place a heater or other appliances near the power cable.
  - There is risk of fire or electric shock.
- Do not allow water to run into electric parts.
  - There is risk of fire, failure of the unit, or electric shock.
- Do not store or use flammable gas or combustibles near the unit.
  - There is risk of fire or failure of unit.
- Do not use the unit in a tightly closed space for a long time.
  - It may cause damage to the unit.
- When flammable gas leaks, turn off the gas and open a window for ventilation before turning the unit on.
  - There is risk of explosion or fire.
- If strange sounds, or smell or smoke comes from unit, turn the breaker off or disconnect the power supply cable.
  - There is risk of electric shock or fire.
- Stop operation and close the window in storm or hurricane. If possible, remove the unit from the window before the hurricane arrives.
  - There is risk of property damage, failure of unit, or electric shock.
- Take care so that children may not step on the outdoor unit.
  - Otherwise, children may be seriously injured due to falling down.

- Do not open the front cover of the unit while operation. (Do not touch the electrostatic filter, if the unit is so equipped.)
  - There is risk of physical injury, electric shock, or unit failure.
- Do not touch any electric part with wet hands. you should be power off before touching electric part.
  - There is risk of electric shock or fire.
- Do not touch refrigerant pipe and water pipe or any internal parts while the unit is operating or immediately after operation.
  - There is risk of burns or frostbite, personal injury.
- If you touch the pipe or internal parts, you should be wear protection or wait time to return to normal temperature.
  - Otherwise , it may cause burns or frostbite, personal injury.
- Turn the main power on 6 hours ago before the product starting operation.
  - Otherwise, it may cause compressor damage.
- Do not touch electric parts for 10 minutes after main power off.
  - There is risk of physical injury, electric shock.
- The inside heater of product may operate during stop mode. It is intended to protect the product.
- Be careful that some part of the control box are hot.
  - There is risk of physical injury or burns.
- When the unit is soaked (flooded or submerged), contact an Authorized Service Center.
  - There is risk of fire or electric shock.
- Be cautious that water could not be poured to the unit directly.
  - There is risk of fire, electric shock, or unit damage.
- Ventilate the unit from time to time when operating it together with a stove, etc.
  - There is risk of fire or electric shock.
- Turn the main power off when cleaning or maintaining the unit.
  - There is risk of electric shock.
- Take care to ensure that nobody could step on or fall onto the unit.
  - This could result in personal injury and unit damage.

- Do not install the product where the noise or hot air from the outdoor unit could damage or disturb the neighborhoods. It may cause a problem for your neighbors and hence dispute.
- If the unit is not used for long time, we strongly recommend not to switch off the power supply to the unit.
  - There is risk of water freezing.
- If the unit is not used and switch off the power supply to the unit for long time, we strongly recommend to drain off all water in the unit by certificated person.
  - There is risk of water freezing.
- The non-fixed appliance shall be stored in an area where the room size corresponds to the room area as specified for operation.
- The appliance shall be stored in a room without continuously operating ignition sources (for example: open flames, an operating gas appliance or an operating electric heater).
- The appliance shall be stored so as to prevent mechanical damage from occurring.
- The non-fixed appliance shall be stored in a room without continuously operating open flames (for example an operating gas appliance) or other potential ignition sources.(for example an operating electric heater, hot surfaces)
- Servicing shall only be performed as recommended by the equipment manufacturer. Maintenance and repair requiring the assistance of other skilled personnel shall be carried out under the supervision of the person competent in the use of flammable refrigerants.
- Servicing shall be performed only as recommended by the manufacturer.
- When mechanical connectors are reused indoors, sealing parts shall be renewed. When flared joints are reused indoors, the flare part shall be re-fabricated.

- Periodic(more than once/year) cleaning of the dust or salt particles stuck on the heat exchangers by using water.
- Keep any required ventilation openings clear of obstruction.

CAUTION INSTRUCTIONS

⚠ CAUTION

- To reduce the risk of minor injury to persons, malfunction, or damage to the product or property when using this product, follow basic precautions, including the following:

Installation

- Keep level even when installing the unit.
  - To avoid vibration or water leakage.
- Two or more people to lift and transport the unit. Avoid personal injury.
- If anyone other than a licensed Professional installs, repairs, or alters LG Electronics Air Conditioning Products, the warranty is voided.
  - All costs associated with repair are then the full responsibility of the owner.
- Do not insert a drain hose in drain or soil pipe.
  - Bad smells can occur and it results in a corrosion of a heat exchanger or pipe.
- Do not install the unit in potentially explosive atmospheres.
- Refrigerants are pre-charged in the factory to the outdoor unit. Additional refrigerants need to be charged depending on the length and size of pipe.
- Make the connections securely so that the outside force of the cable may not be applied to the terminals.
  - Inadequate connection and fastening may generate heat and cause a fire.

Operation

- Do not use the product for special purposes, such as preserving foods, works of art, etc. It is a consumer AWHP, not a precision refrigeration system. There is risk of damage or loss of property.
- Use a soft cloth to clean. Do not use harsh detergents, solvents, etc.
  - There is risk of fire, electric shock, or damage to the plastic parts of the unit.
- Do not step on or put anything on the unit.
  - There is risk of personal injury and failure of unit.
- Use a firm stool or ladder when cleaning or maintaining the unit.
  - Be careful and avoid personal injury.
- Do not turn on the breaker or power under condition that front panel cabinet, top cover, control box cover are removed or opened.
  - Otherwise it may cause fire, electric shock, explosion or death.
- The appliance shall be disconnected from its power source during service and when replacing parts.
- Means for disconnection must be incorporated in the fixed wiring in accordance with the wiring rules.
- The Installation kit supplied with the appliance are to be used and that old Installation kit should not be reused.
- If the supply cord is damaged, it must be replaced by the manufacturer, its service agent or similarly qualified persons in order to avoid a hazard. Installation work must be performed in accordance with the national wiring standards by authorized personnel only.
- The instructions for service to be done by specialized personnel, mandated by the manufacturer or the authorized representative may be supplied in only one Community language which the specialized personnel understand.

- This appliance is not intended for use by persons (including children) with reduced physical, sensory or mental capabilities or lack of experience and knowledge, unless they have been given supervision or instruction concerning use of the appliance by a person responsible for their safety. Children should be supervised to ensure that they do not play with the appliance.
- This appliance can be used by children aged from 8 years and above and persons with reduced physical, sensory or mental capabilities or lack of experience and knowledge if they have been given supervision or instruction concerning use of the appliance in a safe way and understand the hazards involved. Children shall not play with the appliance. Cleaning and user maintenance shall not be made by children without supervision.
- Replace the all batteries in the remote control with new ones of the same type. Do not mix old and new batteries or different types of batteries. There is risk of fire or product failure.
- The manufacturer should specify other potential continuously operating sources known to cause ignition of the refrigerant used.
- In order to avoid a hazard due to inadvertent resetting of the thermal cut-out, this appliance must not be supplied through an external switching device, such as a timer, or connected to a circuit that is regularly switched on and off by the utility.

Safety Instructions for the Service

Checks to the area

- Prior to beginning work on systems containing flammable refrigerants, safety checks are necessary to ensure that the risk of ignition is minimised. For repair to the refrigerating system, the following precautions shall be complied with prior to conducting work on the system.

Work procedure

- Work shall be undertaken under a controlled procedure so as to minimise the risk of a flammable gas or vapour being present while the work is being performed.

General work area

- All maintenance staff and others working in the local area shall be instructed on the nature of work being carried out. Work in confined spaces shall be avoided.

Checking for presence of refrigerant

- The area shall be checked with an appropriate refrigerant detector prior to and during work, to ensure the technician is aware of potentially flammable atmospheres.
- Ensure that the leak detection equipment being used is suitable for use with flammable refrigerants, i.e. non-sparking, adequately sealed or intrinsically safe.

Presence of fire extinguisher

- If any hot work is to be conducted on the refrigerating equipment or any associated parts, appropriate fire extinguishing equipment shall be available to hand. Have a dry powder or CO2 fire extinguisher adjacent to the charging area.

No ignition sources

- No person carrying out work in relation to a refrigerating system which involves exposing any pipe work that contains or has contained flammable refrigerant shall use any sources of ignition in such a manner that it may lead to the risk of fire or explosion.
- All possible ignition sources, including cigarette smoking, should be kept sufficiently far away from the site of installation, repairing, removing and disposal, during which flammable refrigerant can possibly be released to the surrounding space. Prior to work taking place, the area around the equipment is to be surveyed to make sure that there are no flammable hazards or ignition risks. “No Smoking” signs shall be displayed.

Ventilated area

- Ensure that the area is in the open or that it is adequately ventilated before breaking into the system or conducting any hot work. A degree of ventilation shall continue during the period that the work is carried out. The ventilation should safely disperse any released refrigerant and preferably expel it externally into the atmosphere.

Checks to the refrigerating equipment

- Where electrical components are being changed, they shall be fit for the purpose and to the correct specification. At all times the manufacturer’s maintenance and service guidelines shall be followed.
- If in doubt consult the manufacturer’s technical department for assistance.
- The following checks shall be applied to installations using flammable refrigerants:
  - The actual refrigerant charge is in accordance with the room size within which the refrigerant containing parts are installed.
  - The ventilation machinery and outlets are operating adequately and are not obstructed.
  - If an indirect refrigerating circuit is being used, the secondary circuit shall be checked for the presence of refrigerant.
  - Marking to the equipment continues to be visible and legible. Markings and signs that are illegible shall be corrected.
  - Refrigerating pipe or components are installed in a position where they are unlikely to be exposed to any substance which may corrode refrigerant containing components, unless the components are constructed of materials which are inherently resistant to being corroded or are suitably protected against being so corroded.

Checks to electrical devices

- Repair and maintenance to electrical components shall include initial safety checks and component inspection procedures.
- If a fault exists that could compromise safety, then no electrical supply shall be connected to the circuit until it is satisfactorily dealt with.
- If the fault cannot be corrected immediately but it is necessary to continue operation, an adequate temporary solution shall be used.
- This shall be reported to the owner of the equipment so all parties are advised.
- Initial safety checks shall include:
  - Capacitors are discharged: this shall be done in a safe manner to avoid possibility of sparking.
  - No live electrical components and wiring are exposed while charging, recovering or purging the system.
  - Continuity of earth bonding.

Repairs to sealed components

- During repairs to sealed components, all electrical supplies shall be disconnected from the equipment being worked upon prior to any removal of sealed covers, etc.
- If it is absolutely necessary to have an electrical supply to equipment during servicing, then a permanently operating form of leak detection shall be located at the most critical point to warn of a potentially hazardous situation.
- Particular attention shall be paid to the following to ensure that by working on electrical components, the casing is not altered in such a way that the level of protection is affected.
- This shall include damage to cables, excessive number of connections, terminals not made to original specification, damage to seals, incorrect fitting of glands, etc.

- Ensure that apparatus is mounted securely.
- Ensure that seals or sealing materials have not degraded such that they no longer serve the purpose of preventing the ingress of flammable atmospheres.
- Replacement parts shall be in accordance with the manufacturer's specifications.

Repair to intrinsically safe components

- Do not apply any permanent inductive or capacitance loads to the circuit without ensuring that this will not exceed the permissible voltage and current permitted for the equipment in use.
- Intrinsically safe components are the only types that can be worked on while live in the presence of a flammable atmosphere.
- The test apparatus shall be at the correct rating.
- Replace components only with parts specified by the manufacturer.
- Other parts may result in the ignition of refrigerant in the atmosphere from a leak.

NOTE

- The use of silicon sealant can inhibit the effectiveness of some types of leak detection equipment.
- Intrinsically safe components do not have to be isolated prior to working on them.

Cabling

- Cabling will not be subject to wear, corrosion, excessive pressure, vibration, sharp edges or any other adverse environmental effects.
- The check shall also take into account the effects of ageing or continual vibration from sources such as compressors or fans.

Detection of flammable refrigerants

- Under no circumstances shall potential sources of ignition be used in the searching for or detection of refrigerant leaks.
- A halide torch (or any other detector using a naked flame) shall not be used.

Leak detection methods

- The following leak detection methods are deemed acceptable for systems containing flammable refrigerants.
  - Electronic leak detectors shall be used to detect flammable refrigerants, but the sensitivity may not be adequate, or may need re-calibration. (Detection equipment shall be calibrated in a refrigerant-free area.)
  - Ensure that the detector is not a potential source of ignition and is suitable for the refrigerant used.
  - Leak detection equipment shall be set at a percentage of the LFL of the refrigerant and shall be calibrated to the refrigerant employed and the appropriate percentage of gas (25 %maximum) is confirmed.
  - Leak detection fluids are also suitable for use with most refrigerants but the use of detergents containing chlorine shall be avoided as the chlorine may react with the refrigerant and corrode the copper pipe-work.
  - If a leak is suspected, all naked flames shall be removed/ extinguished.
  - If a leakage of refrigerant is found which requires brazing, all of the refrigerant shall be recovered from the system, or isolated (by means of shut off valves) in a part of the system remote from the leak.

NOTE

- Examples of leak detection fluids are
  - Bubble method.
  - Fluorescent method agents.

Removal and evacuation

- When breaking into the refrigerant circuit to make repairs – or for any other purpose – conventional procedures shall be used. However, for flammable refrigerants it is important that best practice is followed since flammability is a consideration. The following procedure shall be adhered to:
  - Remove refrigerant;
  - Purge the circuit with inert gas (optional for A2L);
  - Evacuate (optional for A2L);
  - Purge with inert gas (optional for A2L);
  - Open the circuit by cutting or brazing.
- The refrigerant charge shall be recovered into the correct recovery cylinders.
- For appliances containing flammable refrigerants other than A2L refrigerants, the system shall be purged with oxygen-free nitrogen to render the appliance safe for flammable refrigerants.
- This process may need to be repeated several times.
- Compressed air or oxygen shall not be used for purging refrigerant systems.
- For appliances containing flammable refrigerants, other than A2L refrigerants, refrigerants purging shall be achieved by breaking the vacuum in the system with oxygen-free nitrogen and continuing to fill until the working pressure is achieved, then venting to atmosphere, and finally pulling down to a vacuum.
- This process shall be repeated until no refrigerant is within the system.
- When the final oxygen-free nitrogen charge is used, the system shall be vented down to atmospheric pressure to enable work to take place.
- This operation is absolutely vital if brazing operations on the pipe-work are to take place.
- Ensure that the outlet for the vacuum pump is not close to any potential ignition sources and that ventilation is available.

Charging procedures

- In addition to conventional charging procedures, the following requirements shall be followed.
  - Ensure that contamination of different refrigerants does not occur when using charging equipment. Hoses or lines shall be as short as possible to minimise the amount of refrigerant contained in them.
  - Cylinders shall be kept in an appropriate position according to the instruction.
  - Ensure that the refrigerating system is earthed prior to charging the system with refrigerant.
  - Label the system when charging is complete (if not already).
  - Extreme care shall be taken not to overfill the refrigerating system.
- Prior to recharging the system, it shall be pressure tested with the appropriate purging gas.
- The system shall be leak-tested on completion of charging but prior to commissioning.
- A follow up leak test shall be carried out prior to leaving the site.

Recovery

- When removing refrigerant from a system, either for servicing or decommissioning, it is recommended good practice that all refrigerants are removed safely.
- When transferring refrigerant into cylinders, ensure that only appropriate refrigerant recovery cylinders are employed.
- Ensure that the correct number of cylinders for holding the total system charge are available.
- All cylinders to be used are designated for the recovered refrigerant and labelled for that refrigerant (i.e. special cylinders for the recovery of refrigerant).

- Cylinders shall be complete with pressure relief valve and associated shut-off valves in good working order. Empty recovery cylinders are evacuated and, if possible, cooled before recovery occurs.
- The recovery equipment shall be in good working order with a set of instructions concerning the equipment that is at hand and shall be suitable for the recovery of flammable refrigerants.
- In addition, a set of calibrated weighing scales shall be available and in good working order.
- Hoses shall be complete with leak-free disconnect couplings and in good condition.
- Before using the recovery machine, check that it is in satisfactory working order, has been properly maintained and that any associated electrical components are sealed to prevent ignition in the event of a refrigerant release. Consult manufacturer if in doubt.
- The recovered refrigerant shall be returned to the refrigerant supplier in the correct recovery cylinder, and the relevant Waste Transfer Note arranged.
- Do not mix refrigerants in recovery units and especially not in cylinders. If compressors or compressor oils are to be removed, ensure that they have been evacuated to an acceptable level to make certain that flammable refrigerant does not remain within the lubricant.
- The evacuation process shall be carried out prior to returning the compressor to the suppliers.
- Only electric heating to the compressor body shall be employed to accelerate this process.
- When oil is drained from a system, it shall be carried out safely.

Labelling

- Equipment shall be labelled stating that it has been decommissioned and emptied of refrigerant.
- The label shall be dated and signed.
- Ensure that there are labels on the equipment stating the equipment contains flammable refrigerant.

Decommissioning

- Before carrying out this procedure, it is essential that the technician is completely familiar with the equipment and all its detail.
- It is recommended good practice that all refrigerants are recovered safely.
- Prior to the task being carried out, an oil and refrigerant sample shall be taken in case analysis is required prior to re-use of recovered refrigerant.
- It is essential that electrical power is available before the task is commenced.

  a) Become familiar with the equipment and its operation.

  b) Isolate system electrically.

  c) Before attempting the procedure ensure that:
  - Mechanical handling equipment is available, if required, for handling refrigerant cylinders.
  - All personal protective equipment is available and being used correctly.
  - The recovery process is supervised at all times by a competent person.
  - Recovery equipment and cylinders conform to the appropriate standards.

d) Pump down refrigerant system, if possible.

e) If a vacuum is not possible, make a manifold so that refrigerant can be removed from various parts of the system.

f) Make sure that cylinder is situated on the scales before recovery takes place.

g) Start the recovery machine and operate in accordance with instructions.

h) Do not overfill cylinders. (No more than 80 % volume liquid charge).

i) Do not exceed the maximum working pressure of the cylinder, even temporarily.

j) When the cylinders have been filled correctly and the process completed, make sure that the cylinders and the equipment are removed from site promptly and all isolation valves on the equipment are closed off.

k) Recovered refrigerant shall not be charged into another refrigerating system unless it has been cleaned and checked.

Qualification of workers

- The manual shall contain specific information about the required qualification of the working personnel for maintenance, service and repair operations. Every working procedure that affects safety means shall only be carried out by competent persons. Examples for such working procedures are :
  - breaking into the refrigerating circuit;
  - opening of sealed components;
  - opening of ventilated enclosures.

MAINTENANCE AND SERVICE

Maintenance Activities

In order to ensure optimal availability of the unit, a number of checks and inspections on the unit and the field wiring have to be carried out at regular intervals, preferably yearly. This maintenance should be carried out by your local agreed technician.

When the unit is not going....

CAUTION

- If the product is not used for long time, we strongly recommend not to switch off the power supply to the product.
- If power is not supplied, some special product-protecting actions (such as water pump anti-locking) will not performed.

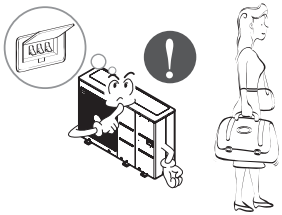

Information relevant for recycling and/or disposal at end-of-life

ENGLISH

Disposal of your old appliance

1 This crossed-out wheeled bin symbol indicates that waste electrical and electronic products (WEEE) should be disposed of separately from the municipal waste stream.

2 Old electrical products can contain hazardous substances so correct disposal of your old appliance will help prevent potential negative consequences for the environment and human health. Your old appliance may contain reusable parts that could be used to repair other products, and other valuable materials that can be recycled to conserve limited resources.

3 You can take your appliance either to the shop where you purchased the product, or contact your local government waste office for details of your nearest authorised WEEE collection point. For the most up to date information for your country please see www.lg.com/global/recycling

БЪЛГАРСКИ

Изхвърляне на стария уред

1 Символът със зачертания контейнер показва, че отпадъците от електрическите и електронните продукти (WEEE) трябва да се изхвърлят отделно от битовите отпадъци.

2 Старите електрически продукти могат да съдържат опасни вещества и правилното изхвърляне на Вашия уред ще помогне за предотвратяване на негативните последствия за околната среда и човешкото здраве. Вашият стар уред може да съдържа части за многократна употреба, които биха могли да бъдат използвани за ремонт на други продукти, както и други ценни материали, които могат да бъдат рециклирани с цел запазване на ограничените ресурси.

3 Можете да занесете Вашия уред или в магазина, от който сте го закупили или можете да се свържете с местния държавен офис за отпадъците, за да получите информация за най-близкия РАЗРЕШЕН WEEE пункт за събиране на отпадъци. За най-актуална информация от Вашата държава, моля, погледнете тук: www.lg.com/global/recycling

HRVATSKI

Zbrinjavanje starog uređaja

1 Ovaj simbol prekrižene kante za smeće na kotačićima označava kako se otpadni električni i električni proizvodi (WEEE) moraju zbrinjavati odvojeno od komunalnog otpada.

2 Dotrajali električni proizvodi mogu sadržavati opasne tvari stoga će ispravno zbirnjavanje vaših dotrajalih uređaja pomoći u sprječavanju potencijalnih negativnih posljedica na okoliš i ljudsko zdravlje. Vaš dotrajao uređaj može sadržavati dijelove koji se mogu ponovo iskoristiti za popravak drugih proizvoda te druge vrijedne materijale koji se mogu reciklirati i tako sačuvati ograničene resurse.

3 Ovisno o razini smetnje / štete i dobi stavke, stari proizvodi mogu se popraviti za više radnog života koji će spriječiti izbjeći otpada. Proizvodi koji nisu prikladni za ponovnu uporabu može se reciklirati da se oporavim vrijedne resurse i pomoći da se smanji globalno potrošnju novih sirovina.

4 Uređaj možete odjnjeti u trgovinu u kojoj ste kupili proizvod ili možete kontaktirati ured za zbrinjavanje otpada kod vaših mjesnih nadležnih tijela te od njih saznati više informacija o najbližem ovlaštenom WEEE sabirnom centru. Za najnovije informacije iz vaše države molimo pogledajte internetske stranice www.lg.com/global/recycling

ČESKY

Likvidace starého přístroje

1 Tento symbol přeškrtnutého koše značí, že odpad z elektrických a elektronických výrobků (WEEE) je nutné likvidovat odděleně od linky komunálního odpadu.

2 Staré elektrické výrobky mohou obsahovat nebezpečné látky, takže správná likvidace starých přístrojů pomůže zabránit potenciálním negativním důsledkům pro životní prostředí a lidské zdraví. Staré přístroje mohou obsahovat znovu použitelné díly, které lze použít k opravě dalších výrobků a další cenné materiály, které lze recyklovat a šetřit tak omezené zdroje.

3 Přístroj můžete zanést buď do obchodu, kde jste ho zakoupili nebo se obrátit na místní správu komunálních odpadů, kde získáte podrobné informace o autorizovaném sběrném místě WEEE. Pro poslední aktuální informace z vaší země si prosím prostudujte web www.lg.com/global/recycling

DANSK

Bortskaffelse af dit gamle apparat

1 Dette symbol med en affaldsspand med kryds over angiver at elektrisk og elektronisk affald (WEEE) skal bortskaffes og genbruges korrekt, adskilt fra kommunens husholdningsaffald.

2 Gamle elektriske produkter kan indeholde farlige stoffer, så når du bortskaffer dit gamle apparat på korrekt vis, hjælper du med at forhindre mulige negative konsekvenser for miljø og mennesker. Dit gamle apparat kan indeholde dele som kan genbruges, fx til at reparere andre produkter, eller værdifulde materialer som kan genbruges og derved begrænse spild af værdifulde ressourcer.

3 Du kan enten tage apparatet til den butik hvor du købte det, eller kontakte dit lokale affaldskontor angående oplysninger om det nærmeste, autoriserede WEEE-samlepunkt. Find de sidste nye oplysninger for dit land på www.lg.com/global/recycling

EESTI

Teie vana seadme hävitamine

1 Läbitõmmatud ristiga prügikasti sümbol tähendab, et elektriliste ja elektrooniliste toodete (WEEE) jäätmeid tuleb olmeprügist eraldi hävitada.

2 Vanad elektriseadmed võivad sisaldada ohtlikke koostisosi, seega aitab prügi nõuetekohane hävitamine vältida võimalikku negatiivset mõju loodusele ja inimeste tervisele. Teie kasutatud seade võib sisaldada taaskasutatavaid osi, millega saab parandada teisi seadmeid ning muid väärtuslikke materjale, mida saab taaskasutada, et säilitada piiratud ressursse.

3 Saate viia oma seadme kas kauplusse, kust see on ostetud või võtta ühendust kohaliku prügiveo ettevõttega, et saada lisainfot oma lähima WEEE jäätmete kogumiskoha kohta. Kõige ajakohasemat infot oma riigi kohta vaadake www.lg.com/global/recycling

SUOMI

Vanhan laitteesi hävittäminen

1 Tämä ylirastitettu jäteastian merkki ilmaisee, että sähkö- ja elektronikkalaitteiden jätteet (WEEE) tulee pitää erillään kotitalousjätteestä ja viedä kunnalliseen kierrätyskeskukseen.

2 Vanhat sähkötuotteet voivat pitää sisällään vaarallisia aineita, joten loppuun käytetyn laitteen oikea hävittäminen ehkäisee ympäristö- ja terveyshaittoja. Vanha laitteesi saattaa pitää sisällään uudelleen käytettäviä osia, joita voidaan käyttää korjaamaan muita tuotteita sekä arvokkaita materiaaleja, joita voidaan kierrättää rajoitettujen resurssien säästämiseksi.

3 Voit viedä laitteesi joko liikkeeseen, josta hankit laitteen, tai ottaa yhteyttä paikallishallintosi ympäristötoimistoon koskien lähintä valtuutettua WEEE -keräyspistettä. Kaikkein viimeisimmät tiedot koskien maatasi, ks. osoitteessa www.lg.com/global/recycling

FRANÇAIS

Recyclage de votre ancien appareil

1 Ce symbole de poubelle barrée d'une croix indique que votre équipement électrique et électronique (EEE) ne doit pas être jeté avec les ordures ménagères. Il doit faire l'objet d'un tri et d'une collecte sélective séparée.

2 Les équipements électriques que vous jetez peuvent contenir des substances dangereuses. Il est donc important de les jeter de façon appropriée afin d'éviter des impacts négatifs sur l'environnement et la santé humaine. L'équipement que vous jetez peut également contenir des pièces réutilisables pour la réparation d'autres produits ainsi que des matériaux précieux pouvant être recyclés pour préserver les ressources de la planète.

3 Vous pouvez rapporter votre appareil au commerçant qui vous l'a vendu ou contacter votre collectivité locale pour connaitre les points de collecte de votre EEE. Vous trouverez également des informations à jour concernant votre pays en allant sur www.quefairedemesdechets.fr

DEUTSCH

Entsorgung Ihrer Altgeräte

1 Das durchgestrichene Symbol eines fahrbaren Abfallbehälters weist darauf hin, dass Elektro- und Elektronik-Produkte (WEEE) getrennt vom Hausmüll entsorgt werden müssen.

2 Alte elektrische Produkte können gefährliche Substanzen enthalten, die eine korrekte Entsorgung dieser Altgeräte erforderlich machen, um schädliche Auswirkungen auf die Umwelt und die menschliche Gesundheit zu vermeiden. Ihre ausgedienten Geräte können wiederverwendbare Teile enthalten, mit denen möglicherweise andere Produkte repariert werden können, aber auch sonstige wertvolle Materialien enthalten, die zur Schonung knapper Ressourcen recycelt werden können.

3 Sie können Ihr Gerät entweder in den Laden zurückbringen, in dem Sie das Produkt ursprünglich erworben haben oder Sie kontaktieren Ihre Gemeindeabfallstelle für Informationen über die nächstgelegene autorisierte WEEE Sammelstelle. Die aktuellsten Informationen für Ihr Land finden Sie unter www.lg.com/global/recycling

ΕΛΛΗΝΙΚΑ

Απόρριψη της παλιάς σας συσκευής

1 Αυτό το διαγραμμένο σύμβολο του τροχοφόρου κάδου υποδεικνύει ότι τα απόβλητα ηλεκτρικών και ηλεκτρονικών προϊόντων (ΑΗΗΕ) πρέπει να απορρίπτονται χωριστά από τα γενικά οικιακά απορρίμματα.

2 Τα παλιά ηλεκτρικά προϊόντα μπορεί να περιέχουν επικίνδυνες ουσίες και ως εκ τούτου η σωστή απόρριψη της παλιάς σας συσκευής αποτρέπει ενδεχόμενες αρνητικές συνέπειες για το περιβάλλον και την ανθρώπινη υγεία. Η παλιά σας συσκευή μπορεί να περιέχει επαναχρησιμοποιήσιμα ανταλλακτικά που θα μπορούσαν να χρησιμοποιηθούν για την επισκευή άλλων προϊόντων, καθώς και άλλα υλικά αξίας που μπορούν να ανακυκλωθούν για εξοικονόμηση των περιορισμένων φυσικών πόρων.

3 Μπορείτε να πάτε τη συσκευή σας, είτε στο κατάστημα από το οποίο αγοράσατε το προϊόν, ή να επικοινωνήσετε το τοπικό γραφείο απορριμμάτων για λεπτομέρειες σχετικά με το πλησιέστερο εγκεκριμένο σημείο συλλογής ΑΗΗΕ (Απόβλητα Ηλεκτρικών και Ηλεκτρονικών Συσκευών). Για τις πιο πρόσφατες πληροφορίες για τη χώρα σας επισκεφθείτε τη διεύθυνση www.lg.com/global/recycling

MAGYAR

A régi készülék ártalmatlanítása

1 A leselejtezett elektromos és elektronikai termékeket a háztartási hulladéktól elkülönítve kell begyűjteni, a jogszabályok által kijelölt módon és helyen.

2 Régi készülékeinek megfelelő leselejtezése segíthet megelőzni az esetleges egészségre vagy környezetre ártalmas hatásokat.

3 Ha további információra van szüksége régi készülékeinek leselejtezésével kapcsolatban, lépjen kapcsolatba velünk a szelektalok.hu oldalon ahol tájékoztatjuk Önt visszavételi, átvételi, gyűjtési és kezelési kötelezettségeinkről.

ITALIANO

Smaltimento delle apparecchiature obsolete

1 Tutte le apparecchiature elettriche ed elettroniche, contrassegnate da questo simbolo ("bidone della spazzatura barrato da una croce"), devono essere raccolte e smaltite separatamente rispetto agli altri rifiuti urbani misti mediante impianti di raccolta specifici installati da enti pubblici o dalle autorità locali. Si ricorda che gli utenti finali domestici possono consegnare gratuitamente le apparecchiature elettriche ed elettroniche a fine vita presso il punto vendita all'atto dell'acquisto di una nuova apparecchiatura equivalente. Gli utenti finali domestici possono inoltre consegnare gratuitamente apparecchiature elettriche ed elettroniche di piccolissime dimensioni (non eccedenti i 25 cm) a fine vita direttamente presso un punto vendita a ciò abilitato, senza obbligo di acquistare una apparecchiatura nuova di tipo equivalente. Si prega di informarsi previamente presso il punto vendita prescelto circa tale ultima modalità di conferimento dell'apparecchiatura a fine vita.

2 Il corretto smaltimento dell'unità obsoleta contribuisce a prevenire possibili conseguenze negative sulla salute degli individui e sull'ambiente. Una gestione responsabile del fine vita delle apparecchiature elettriche ed elettroniche da parte degli utenti contribuisce al riutilizzo, al riciclaggio ed al recupero sostenibile dei prodotti obsoleti e dei relativi materiali.

3 Per informazioni più dettagliate sullo smaltimento delle apparecchiature obsolete, contattare l'ufficio del comune di residenza, il servizio di smaltimento rifiuti o il punto vendita in cui è stato acquistato il prodotto. (www.lg.com/global/recycling)

ҚАЗАҚША

Ескі құрылғыны қоқысқа тастау

1 Бұл осы үсті сызылған шелек таңбасы қоқыс электр және электрондық өнімдер (WEEE) қалалық қоқыс жүйесінен бөлек жойылуы керектігін білдіреді.

2 Ескі электр құрылғыларында зиянды заттар болады, сондықтан ескі құрылғыны тиісті түрде қоқысқа тастау қоршаған орта мен адам денсаулығына тиюі мүмкін кері әсерлердің алдын алуға көмектеседі. Ескі құрылғыңызда басқа өнімдерді және шектеулі ресурстарды сақтау қайта өңделетін маңызды материалдарды жөндеу үшін қолданылатын қайта қолданбалы бөлшектер болуы мүмкін.

3 Құрылғыңызды өнімді сатып алған дүкенге апаруға немесе жақын жердегі өкілетті WEEE жинау нүктесі туралы мәліметтер үшін жергілікті басқару мекемесіне хабарласуға болады. Еліңіз үшін ең соңғы ақпаратты алу үшін www.lg.com/global/recycling веб-сайтын қараңыз

LATVIEŠU

Jūsu vecās ierīces likvidēšana

1 Šis simbols – pārsvītrota atkritumu tvertne uz riteņiem – norāda, ka elektrisko un elektronisko iekārtu atkritumi (EEIA) jālikvidē atsevišķi no sadzīves atkritumu plūsmas.

2 Veci elektriskie izstrādājumi var saturēt bīstamas vielas, tādēļ jūsu vecās ierīces pareiza likvidēšana palīdzēs novērst iespējamās negatīvās sekas videi un cilvēka veselībai. Jūsu vecā ierīce var saturēt vairākkārt izmantojamas detaļas, kuras var izmantot citu izstrādājumu remontam, un citus vērtīgus materiālus, kurus var pārstrādāt, tādējādi saglabājot ierobežotus resursus.

3 Jūs varat aiznest ierīci vai nu uz veikalu, kurā šo izstrādājumu iegādājieties, vai sazināties ar vietējās pašvaldības atkritumu savākšanas iestādi un uzzināt sīkāku informāciju par tuvāko oficiālo EEIA savākšanas punktu. Jaunāko informāciju par savu valsti skatiet vietnē www.lg.com/global/recycling

LIETUVIŲ K.

Seno prietaiso utilizavimas

1 Išbrauktos šiukšlių dėžės simbolis rodo, kad elektros ir elektronikos įrangos atliekos (EĮEA) turėtų būti utilizuojamos atskirai nuo komunalinių atliekų.

2 Senoje elektrinėje įrangoje gali būti pavojingų medžiagų, taigi tinkamas seno prietaiso utilizavimas padės apsisaugoti nuo galimų neigiamų pasekmių aplinkai ir žmonių sveikatai. Jūsų sename prietaise gali būti dalių, kurias galima panaudoti dar kartą taisant kitą įrangą ir kitų vertingų medžiagų, kurios gali būti perdirbamos siekiant tausoti ribotus išteklius.

3 Savo prietaisą galite nugabenti į parduotuvę, kurioje įrangą įsigijote, arba susisiekite su vietos valdžios atliekų tarnyba norėdami gauti artimiausio EĮEA surinkimo vietos informaciją. Norėdami gauti daugiau informacijos savo šalyje, apsilankykite www.lg.com/global/recycling

NEDERLANDS

Verwijdering van uw oude apparaat

1 Dit symbool van de doorgekruiste vuilnisbak geeft aan dat afgedankte elektrische en elektronische producten (WEEE) afzonderlijk van het huishoudelijke afval moeten worden verwijderd.

2 Oude elektrische producten kunnen gevaarlijke stoffen bevatten, dus een juiste verwijdering van uw oude apparaat helpt bij het voorkomen van mogelijke negatieve gevolgen voor het milieu en de volksgezondheid. Uw oude apparaat kan herbruikbare onderdelen bevatten die gebruikt zouden kunnen worden voor het repareren van andere producten, en andere waardevolle materialen die kunnen worden gerecycleerd voor het behoud van beperkte grondstoffen.

3 U kunt uw apparaat meenemen naar de winkel waar u het product hebt gekocht, of u kunt contact opnemen met uw plaatselijke afvalinstantie voor de gegevens van uw dichtstbijzijnde geautoriseerde WEEE-verzamelpunt. Voor de meest geactualiseerde informatie voor uw land wordt verwezen naar www.lg.com/global/recycling

NORSK

Avhending av gamle apparater

1 Dette symbolet av en utkrysset avfallsdunk indikerer at kasserte elektriske og elektroniske produkter (WEEE) skal kastes separat fra husholdningsavfall og leveres til den kommunale resirkulering.

2 Gamle elektriske produkter kan inneholde farlige stoffer, så korrekt avfallshåndtering av det gamle apparatet bidrar til å hindre potensielt negative konsekvenser for miljøet og andres helse. Gamle apparater kan inneholde gjenbrukbare deler som kan brukes til å reparere andre produkter og andre verdifulle materialer som kan resirkuleres for å bevare begrensede ressurser.

3 Du kan bringe apparatet enten til butikken der du kjøpte produktet, eller ta kontakt med den lokale myndighetens avfallskontor for informasjon om nærmeste autoriserte innsamlingspunkt for el-avfall (WEEE-avfall). For den mest oppdaterte informasjonen for ditt land, gå til www.lg.com/global/recycling

POLSKI

Utylizacja starego urządzenia

1 Symbol przekreślonego pojemnika na odpady na kółkach oznacza, że produkty elektryczne lub elektroniczne (WEEE) należy zutylizować poza obiegiem odpadów komunalnych.

2 Stare produkty elektroniczne mogą zawierać niebezpieczne substancje. Właściwa utylizacja starego urządzenia pozwoli uniknąć potencjalnych negatywnych skutków dla środowiska i zdrowia. Stare urządzenie może zawierać części wielokrotnego użytku, które mogą zostać wykorzystane do naprawy innych produktów lub inne wartościowe materiały, które można przetworzyć, aby oszczędzać zasoby naturalne.

3 Możesz zanieść urządzenie do sklepu, w którym zostało kupione lub skontaktować się z lokalnym urzędem gospodarki odpadami, aby uzyskać informacje o najbliższym punkcie zbiórki WEEE. Aby uzyskać aktualne informacje z zakresu gospodarki odpadami obowiązującej w Twoim kraju, odwiedź stronę http://www.lg.com/global/sustainability/environment/take-back-recycling/global-network-europe (plik PDF : „For more information about how to recycle LG products in your country".

PORTUGUÊS

Eliminação do seu aparelho usado

1 Este símbolo de um caixote do lixo com rodas e linhas cruzadas sobrepostas indica que os resíduos de produtos elétricos e eletrónicos (WEEE) devem ser eliminados separadamente do lixo doméstico.

2 Os produtos elétricos usados podem conter substâncias perigosas, pelo que, a eliminação correta do seu aparelho usado pode contribuir para evitar potenciais danos para o ambiente e saúde humana. O seu aparelho usado pode conter peças reutilizáveis que podem ser usadas para reparar outros aparelhos e materiais úteis que podem ser reciclados para preservar os recursos limitados.

3 Pode levar o seu aparelho à loja onde o adquiriu ou contactar a sua entidade local de recolha e tratamento de resíduos para obter mais informações sobre o ponto de recolha WEEE autorizado mais próximo. Para obter informações mais atualizadas relativas ao seu país, visite www.lg.com/global/recycling

ROMÂNĂ

Eliminarea aparatului vechi

1 Simbolul de pubelă indică faptul că deșeurile electrice și electronice (WEEE) trebuie eliminate separat de celelalte deșeuri.

2 Produsele electrice și electronice vechi conțin substanțe periculoase. Astfel, prin eliminarea corespunzătoare veți contribui la prevenirea deteriorării mediului înconjurător și al sănătății umane. Este posibil ca dispozitivul dvs. vechi să conțină piese componente, care pot fi folosite pentru repararea altor produse sau materiale importante care pot fi reciclate în scopul economisirii resurselor limitate.

3 Dispozitivul vechi poate fi returnat magazinului de unde a fost achiziționat, sau puteți contacta firma responsabilă pentru eliminarea deșeurilor, în scopul aflării locației unității autorizate pentru reciclarea deșeurilor electrice și electronice (WEEE). Pentru informații mereu actualizate și referitoare la țara dvs. vă rugăm vizitați pagina web www.lg.com/global/recycling

SRPSKI

Odlaganje starog aparata

1 Ovaj simbol precrtana kanta za smeće pokazuje da električni i elektronski otpad (WEEE) treba da se odlaže odvojeno od običnog komunalnog otpada.

2 Stari električni aparati mogu da sadrže otrovne supstance, tako da će pravilno odlaganje Vašeg starog aparata pomoći sprečavanju pojave negativnih posledica po životnu sredinu i zdravlje ljudi. Vaš stari aparat može da sadrži delove za višekratnu upotrebu koji se mogu koristiti za zamenu drugih proizvoda i druge vredne materijale koji se mogu reciklirati radi očuvanja ograničenih resursa.

3 Vaš aparat možete da odnesete u radnju gde ste ga kupili ili da kontaktirate lokalnu vladinu kancelariju za otpad kako biste dobili informaciju o najbližoj autorizovanoj WEEE stanici za odlaganje ovog otpada. Za najnovije informacije za Vašu zemlju, molimo Vas da pogledate web stranicu www.lg.com/global/recycling

SLOVENČINA

Zneškodnenie starého spotrebiča

1 Tento symbol prečiarknutého odpadkového koša na kolieskach znamená, že odpad z elektrických a elektronických zariadení (WEEE) musí byť zneškodnený samostatne od komunálneho odpadu.

2 Staré elektrické produkty môžu obsahovať nebezpečné latky, preto správne zneškodnenie vášho starého spotrebiča pomôže zabrániť potenciálnym negatívnym dopadom na prostredie a ľudské zdravie. Váš starý spotrebič môže obsahovať diely, ktoré možno opätovne použiť na opravu iných produktov, a iné cenné materiály, ktoré možno recyklovať s cieľom chrániť obmedzené zdroje.

3 Svoj spotrebič môžete zaniesť do predajne, kde ste produkt zakúpili, alebo sa môžete obrátiť na oddelenie odpadov miestnej samosprávy a požiadať o informácie o najbližšom zbernom mieste odpadu z elektrických a elektronických zariadení (WEEE). Najnovšie informácie platné pre vašu krajinu nájdete na stránke www.lg.com/global/recycling

SLOVENŠČINA

Odstranjevanje vašega starega aparata

1 Na izdelku prečrtan simbol smetnjaka opozarja, da je treba odpadne električne in elektronske izdelke (OEEI) odstranjevati ločeno od ostalih komunalnih odpadkov.

2 Odpadni električni izdelki lahko vsebujejo nevarne snovi, zato s pravilnim odstranjevanjem starega aparata pripomorete k preprečevanju morebitnih negativnih vplivov na okolje in zdravje ljudi. Vaš stari aparat lahko vsebuje dele, ki bi jih bilo mogoče uporabiti za popravilo drugih izdelkov, in druge dragocene materiale, ki jih je mogoče reciklirati in s tem ohranjati omejene vire.

3 Vaš aparat lahko odnesete bodisi v trgovino, kjer ste kupili ta izdelek, ali pa se obrnite na lokalni urad za odstranjevanje odpadkov glede podrobnosti o najbližjem pooblaščenem zbirnem mestu za OEEI. Za najnovejše informacije za vašo državo si oglejte www.lg.com/global/recycling

ESPAÑOL

Símbolo para marcar AEE

1 El símbolo del contenedor de basura tachado con un aspa indica que la recogida separada de aparatos eléctricos y electrónicos (AEE) debe realizarse de manera separada.

2 Los productos eléctricos antiguos pueden contener sustancias peligrosas de modo que la correcta eliminación del antiguo aparato ayudará a evitar posibles consecuencias negativas para el medio ambiente y para la salud humana. El antiguo aparato puede contener piezas reutilizables que podrían utilizarse para reparar otros productos y otros materiales valiosos que pueden reciclarse para conservar los recursos limitados.

3 Puede llevar el aparato a cualquiera de los centros autorizados para su recogida. Para obtener la información más actualizada para su país por favor visite www.lg.com/global/recycling

SVENSKA

Kassera den gamla apparaten

1 Den överkorsade soptunnesymbolen indikerar att elektroniskt och elektrickt avfall (WEEE) ska kasseras separat från hushållsavfallet och lämnas in till av kommunen anvisat ställe för återvinning.

2 Gamla elektroniska och elektriska produkter kan innehålla farliga substanser så korrekt avfallshantering av produkten förhindrar negativa konsekvenser för miljön och den mänskliga hälsan. Din gamla apparat kan innehålla återanvändningsbara delar som används för att reparera andra produkter och andra värdefulla material som kan återvinnas för att spara begränsade resurser.

3 Du kan ta din gamla apparat till butiken där du köpte produkten, eller kontakta din kommun för information om närmaste WEEE-uppsamlingsställe. För den mest uppdateade informationen i ditt land, gå till www.lg.com/global/recycling

РУССКИЙ

Утилизация старого оборудования

1 Этот перечеркнутый символ мусорной корзины указывает на то, что отработанные электрические и электронные изделий (WEEE) следует утилизировать отдельно от бытовых отходов.

2 Старые электрические изделия могут содержать опасные вещества, поэтому правильная утилизация старого оборудования поможет предотвратить возможные негативные последствия для окружающей среды и здоровья человека. Старое оборудование может содержать детали, которые могут быть повторно использованы для ремонта других изделий, а также другие ценные материалы, которые можно переработать, чтобы сохранить ограниченные ресурсы.

3 Вы можете отнести свой прибор в магазин, где он был приобретен, либо связаться с органами местного самоуправления для получения подробных сведений о ближайшем пункте приема отходов электрического и электронного оборудования (WEEE). Для получения самой свежей информации относительно вашей страны обращайтесь по адресу: www.lg.com/global/recycling

TÜRKÇE

Eski cihazınızın atılması

1 Tüm elektrikli ve elektronik atıklar, devlet ya da yerel yetkililer tarafından belirlenen toplama merkezlerinde ayrı olarak imha edilmelidir. Atık eletrikli ve elektronik aletler belediyeler tarafından kurulan toplama noktalarına teslim edilmeli veya aldığınız yeni ürünü satıcınız adresinize teslim ederken, satıcınızdan atık elektrikli ve elektronik aletinizi teslim almasını istemelisiniz.

2 Atık ürünün doğru imhası çevre ve insan sağlığı üzerindeki potansiyel olumsuz sonuçların engellenmesine yardımcı olacaktır.

3 Eski ürününüzün imhası hakkında daha fazla bilgi için lütfen belediyeniz ya da ürünü aldığını mağaza ile iletişime geçiniz.

4 AEEE Yönetmeliğine Uygundur.

5 Bu işareti içeren ürünler tehlikeli madde içerebilir. Ürünler içerisindeki tehlikeli maddeler çevre kirlenmesine veya yaralanma/ölüme sebebiyet verebilir. (www.lg.com/global/recycling)

УКРАЇНСЬКА

Утилізація старого обладнання

1 Цей перекреслений символ сміттєвого кошика вказує, що відпрацьовані електричні та електронні вироби (WEEE) потрібно утилізувати окремо від побутових відходів.

2 Старі електричні вироби можуть містити небезпечні речовини, тому правильна утилізація старого обладнання допоможе запобігти можливим негативним наслідкам для навколишнього середовища та здоров'я людини. Старе обладнання може містити деталі, які можуть бути використані повторно для ремонту інших виробів, а також інші цінні матеріали, які можливо переробити, щоб зберегти обмежені ресурси.

3 Ви можете віднести свій прилад в магазин, де його було придбано, або зв'язатися з органами місцевого самоврядування, щоб отримати докладні відомості про найближчий пункт прийому відходів електричного та електронного обладнання (WEEE). Щоб отримати найсвіжішу інформацію щодо вашої країни, звертайтеся за адресою: www.lg.com/global/recycling

DISASSEMBLY GUIDE

"Attention! Users should never attempt disassembly on their own! Please contact a professional!"

(EN) : "Attention! Users should never attempt disassembly on their own! Please contact a professional!"
(SQ) : "Kujdes! Përdoruesit kurrë nuk duhet të përpiqen të çlirojnë vetë! Ju lutem kontaktoni një profesionist!"
(BS) : "Pažnja! Korisnici nikada ne bi trebali pokušati demontažu sami! Molimo kontaktirajte profesionalca!"
(BG) : "Внимание! Потребителите никога не трябва да се опитват да демонтират сами!
(HR) : "Pažnja! Korisnici nikada ne bi smjeli sami pokušavati rastavljanje! Obratite se profesionalcu!"
(CS) : "Pozor! Uživatelé by se nikdy neměli pokoušet demontovat samy o sobě!
(DA) : "OBS! Brugere bør aldrig forsøge demontering på egen hånd! Kontakt venligst en professionel!"
(NL) : "Let op! Gebruikers mogen nooit zelf demonteren! Neem contact op met een professional!"
(ET) : "Tähelepanu! Kasutajad ei tohiks kunagi proovida lahti monteerida!" Palun võtke ühendust professionaaliga! "
(FI) : "Huomio! Käyttäjät eivät saa koskaan yrittää purkaa itseään! Ota yhteyttä ammattilaiseen!"
(FR) : "Attention! Les utilisateurs ne doivent jamais essayer de démonter par eux-mêmes! Veuillez contacter un professionnel!"
(DE) : "Achtung! Benutzer sollten niemals selbst eine Demontage versuchen! Bitte wenden Sie sich an einen Fachmann!"
(EL) : "Προσοχή! Οι χρήστες δεν θα πρέπει ποτέ να προσπαθήσουν να αποσυναρμολογηθούν μόνοι σας!
(HU) : "Figyelmeztetés: a felhasználóknak soha ne próbálják szétbontani a szoftvert!"
(IS) : "Attention! Notendur ættu aldrei að reyna að taka í sundur á eigin spýtur! Vinsamlegast hafðu samband við fagmann!"
(GA) : "Tabhair aire! Níor chóir go n-éireodh le húsáideoirí iad féin a dhíspreagadh dá gcuid féin! Déan teagmháil le gairmí!"
(IT) : "Attenzione: gli utenti non dovrebbero mai tentare di smontare da soli! Si prega di contattare un professionista!"
(LV) : "Uzmanību! Lietotāji nekad nevajadzētu mēģināt izjaukt paši! Lūdzu, sazinieties ar profesionālu!"
(LT) : "Dėmesio! Vartotojai niekada neturėtų bandyti išardyti savęs! Prašau susisiekti su profesionalu!"
(MK) : "Внимание! Корисниците никогаш не треба да се обидуваат сами да ги размонтираат! Ве молиме контактирајте со професионалец!"
(MT) : "Attenzjoni! L-utenti qatt ma għandhom jippruvaw jiżżarmaw waħedhom! Jekk jogħġbok ikkuntattja professjonist!"
(NO) : "Oppmerksomhet! Brukere bør aldri forsøke demontering på egen hånd! Ta kontakt med en profesjonell!"
(PL) : "Uwaga! Użytkownicy nigdy nie powinni próbować samodzielnego demontażu! Skontaktuj się z profesjonalistą!"
(PT) : "Atenção! Os usuários nunca devem tentar a desmontagem por conta própria! Entre em contato com um profissional!"
(RO) : "Atenție: utilizatorii nu ar trebui să încerce niciodată dezasamblarea pe cont propriu!
(SR) : "Пажња! Корисници никада не би требали покушавати демонтажу! Молимо контактирајте професионалца!"
(SK) : "Pozor! Užívatelia by sa nikdy nemali pokúšať demontáž samy o sebe!
(SL) : "Pozor! Uporabniki nikoli ne smejo poskusiti sami razstavljati!"
(ES) : "¡Atención! ¡Los usuarios nunca deben intentar el desmontaje por sí mismos! ¡Póngase en contacto con un profesional!"
(SV) : "OBS! Användare ska aldrig försöka demontera på egen hand! Vänligen kontakta en professionell!"

⚠ WARNING

Do not touch any electric part with wet hands. you should be power off before touching electric part.

- There is risk of electric shock or fire.

Do not touch refrigerant pipe and water pipe or any internal parts while the unit is operating or immediately after operation.

- There is risk of burns or frostbite, personal injury.

If you touch the pipe or internal parts, you should be wear protection or wait time to return to normal temperature.

- Otherwise , it may cause burns or frostbite, personal injury.

(SQ) ⚠ PARALAJMËRIM

Mos prekni asnjë pjesë elektrike me duar të lagura. Duhet ta fikni energjinë para se të prekni pjesët elektrike.

- Ekziston rreziku i goditjeve elektrike ose zjarrit.

Mos e prekni tubin e antipiretikut dhe tubin e ujit apo asnjë pjesë të brendshme ndërkohë që njësia është në punë ose menjëherë pas punimit.

- Ekziston rreziku i djegieve, kafshimit nga ngrica ose lëndimeve personale.

Nëse prekni tubin ose pjesët e brendshme, duhet të vishni mjete mbrojtëse ose të prisni që të kthehet në temperaturën normale.

- Përndryshe mund të shkaktojë djegie, kafshime nga ngrica ose lëndime personale.

(BS) ⚠ UPOZORENJE

Ne dodirujte ni jedan električni dio vlažnim rukama. trebalo bi da isključite napajanje prije dodirivanja električnih dijelova.

- Postoji rizik od strujnog udara ili požara.

Ne dodirujte rashladnu cijev i vodovodnu cijev ili bilo koji drugi unutarnji dio tokom ili odmah poslije rada.

- Postoji opasnost od opekotina ili promrzlina, tjelesne povrede.

Ako dodirnete cijev ili unutarnje dijelove, trebalo bi da nosite zaštitu ili da čekate da se vrati na normalnu temperaturu.

- U suprotnom, to može da izazove opekotine ili promrzline, tjelesne povrede.

(BG) ⚠ ПРЕДУПРЕЖДЕНИЕ

Не докосвайте с мокри ръце никоя електрическа част. Изключете захранването, преди да докосвате електрическата част.

- Съществува риск от електрически удар или пожар.

Не докосвайте тръбата за хладилния агент и тръбата за вода, нито която и да е вътрешна част на уреда, докато той работи или току-що е спрял.

- Съществува риск от изгаряне, измръзване и наранявания.

Ако е необходимо да докосвате тръби или вътрешни части, трябва да носите предпазни ръкавици или да изчакате, докато тръбите или частите достигнат нормална температура.

- В противен случай съществува риск от изгаряне, измръзване и наранявания.

(HR) ⚠ UPOZORENJE

Nijedan električni dio ne dodirujte vlažnim rukama. Prije dodirivanja električnih dijelova isključite napajanje.

- Postoji opasnost od električnog udara ili požara.

Ne dodirujte cijev rashladnog sredstva i cijev za vodu ili bilo koje unutarnje dijelove dok uređaj radi ili neposredno nakon što je prestao s radom.

- Postoji opasnost od opeklina, ozebline ili tjelesnih ozljeda.

Ako dodirujete cijev ili unutarnje dijelove, nosite zaštitne rukavice ili pričekajte da se temperatura vrati u normalu.

- U suprotnom, može uzrokovati opekline, ozebline ili tjelesne ozljede.

(CS) ⚠ VAROVÁNÍ

Žádné elektrické součásti se nedotýkejte vlhkýma či mokrýma rukama. Než se dotknete elektrické součásti, je třeba odpojit napájení.

- Hrozí nebezpečí úrazu elektrickým proudem či požáru.

Když je jednotka v provozu nebo těsně po skončení provozu, nedotýkejte se chladicího ani vodního potrubí ani žádných vnitřních součástí.

- Hrozí nebezpečí popálenin či omrzlin a zranění osob.

Při dotyku potrubí či interních součástí je třeba nosit ochranné pomůcky nebo vyčkat, až se obnoví jejich běžná teplota.

- Jinak hrozí nebezpečí popálenin či omrzlin a zranění osob.

(DA) ⚠ ADVARSEL

Rør ikke ved nogen elektriske dele med våde hænder. Der skal være slukket for strømmen til anlægget, før du berører de elektriske dele.

- Der kan opstå fare for elektrisk stød eller brand.

Rør ikke køle- og vandrør eller andre interne dele, mens anlægget er i drift eller umiddelbart efter anvendelse.

- Der kan opstå fare for brandskader eller forfrysninger og tilskadekomst.

Hvis der røres ved rør eller indvendige dele, skal der anvendes beskyttelsesudstyr eller der ventes til anlægget er kølet af.

- Der kan opstå fare for forbrændinger, forfrysninger eller personskade.

(NL) ⚠ WAARSCHUWING

Raak geen elektrische onderdelen aan met natte handen. U moet de stroom eraf halen voordat u elektrische onderdelen aanraakt.

- Er bestaat risico op een elektrische schok of brand.

Raak de koelmiddelleiding en waterleiding of interne onderdelen niet aan wanneer de unit in werking is of direct na werking.

- Er bestaat risico op brandwonden of bevriezing, lichamelijk letsel.

Als u de leiding of interne onderdelen aanraakt, moet u bescherming dragen of een tijdje wachten tot de temperatuur weer normaal is.

- Anders kan ditt brandwonden of bevriezing veroorzaken, lichamelijk letsel.

(ET) ⚠ HOIATUS

Ärge puudutage elektriosasid märgade kätega. enne elektriosade puudutamist lülitage toide välja.

- Elektrilöögi- või tuleoht.

Ärge puudutage seadme töötamise ajal või vahetult pealt selle töötamist külmutusagensi toru, veetoru ega ühtegi seadme sisemist osa.

- Põletuse, külmakahjustuse või kehavigastuse oht.

Torude või sisemiste osade puudutamisel tuleb teil kanda kaitsevarustust või peate ootama, kuni seadme temperatuur normaliseerub.

- Vastasel juhul on põletuse, külmakahjustuse või kehavigastuse oht.

(FI) ⚠ VAROITUS

Älä koske sähköisiin osiin märin käsin. Virta on kytkettävä pois päältä ennen sähköosiin koskemista.

- Ohjeen noudattamatta jättäminen voi aiheuttaa tulipalon ja sähköiskun.

Älä koske kylmäainejohtoon ja vesijohtoon tai sisäosiin, kun laite on toiminnassa tai välittömästi sen päätyttyä.

- Tämä voi johtaa paleltumis- tai henkilövammaan.

Jos kosketat johtoa tai sisäisiä osia, sinun pitäisi käyttää suojakäsineitä tai odottaa kunnes laite saavuttaa normaaliin lämpötilan.

- Muussa tapauksessa on palovammojen tai paleltumien ja henkilövahingon vaara.

(FR) ⚠ AVERTISSEMENT

Ne touchez aucune pièce électrique avec les mains humides. Coupez l'alimentation électrique avant de toucher les pièces électriques.

- Il existe un risque de décharge électrique ou d'incendie.

Ne touchez pas le tuyau de réfrigérant ni la conduite d'eau ou toute pièce interne pendant le fonctionnement de l'unité ou immédiatement après.

- Il existe un risque de brûlures, d'engelures ou d'autres blessures.

Si vous voulez toucher le tuyau ou des pièces internes, portez une protection ou attendez le retour à la température normale.

- À défaut, vous risquez des brûlures, des engelures ou d'autres blessures.

(DE) ⚠ ACHTUNG

Elektrische Bauteile niemals mit feuchten oder nassen Händen berühren. Vor dem Berühren elektrischer Bauteile sollte die Stromversorgung unterbrochen werden.

- Es besteht Stromschlag- oder Brandgefahr.

Kältemittel- und Wasserrohre oder sonstige interne Bauteile während des Betriebs oder unmittelbar nach dem Betrieb nicht berühren.

- Es besteht die Gefahr von Verbrennungen, Erfrierungen oder Verletzungen.

Rohrleitungen oder interne Bauteile sollten nur mit entsprechender Schutzkleidung oder nach dem Abkühlen der Bauteile berührt werden.

- Ansonsten besteht die Gefahr von Verbrennungen, Erfrierungen oder Verletzungen.

(EL) ⚠ ΠΡΟΕΙΔΟΠΟΙΗΣΗ

Μην ακουμπάτε οποιοδήποτε ηλεκτρικό εξάρτημα με βρεγμένα χέρια. Απενεργοποιήστε την ισχύ προτού ακουμπήσετε ηλεκτρικά μέρη.

- Υπάρχει κίνδυνος ηλεκτροπληξίας ή φωτιάς.

Μην ακουμπάτε τον σωλήνα του ψυκτικού ή τα εσωτερικά μέρη ενώ λειτουργεί η μονάδα ή αμέσως μετά τη λειτουργία.

- Υπάρχει κίνδυνος εγκαυμάτων, κρυοπαγήματος ή τραυματισμού.

Εάν ακουμπήσετε τον σωλήνα ή τα εσωτερικά μέρη, πρέπει να φοράτε προστατευτικά ή να περιμένετε για κάποια ώρα ώστε να επιστρέψει η κανονική θερμοκρασία.

- Αλλιώς, πιθανόν να προκληθούν εγκαύματα, κρυοπαγήματα ή τραυματισμός.

(HU) ⚠ FIGYELEM

Nedves kézzel ne érintse meg az elektromos alkatrészeket. Az elektromos alkatrészek megérintése előtt kapcsolja ki a hálózati feszültséget.

- Fennáll az áramütés vagy a tűz veszélye.

Működés közben, illetve közvetlenül a leállítás után ne érintse meg a hűtőcsövet, vízcsövet, vagy bármelyik belső alkatrészt.

- Fennáll az égés, fagyási sérülés és személyi sérülés veszélye.

A csöveket vagy belső alkatrészeket csak védőkesztyűvel, vagy a készülék szobahőmérsékletre hűlése után érintse meg.

- Egyébként fennáll az égés, fagyási sérülés és személyi sérülés veszélye.

(IS) ⚠ VIÐVÖRUN

Ekki koma við neina rafmagnshluta með blautum höndum. Þú ættir að slökkva á afli áður en komið er við rafmagnshluta.

- Það er hætta á raflosti eða eldsvoða.

Ekki koma við kæliefnaleiðslur, vatnsleiðslur eða einhverja innri hluti á meðan eining starfar eða strax eftir starfsemi.

- Það er hætta á bruna eða kali eða persónulegum meiðslum.

Ef þú kemur við leiðslu eða innri hluti ættirðu að vera með hlífar eða bíða þangað til einingin er komin niður í eðlilegt hitastig.

- Annars gæti það valdið bruna, kali eða persónulegum meiðslum.

(GA) ⚠ RABHADH

À dteagmháil aon chuid leictreach leis na lámha fliuch. À chóir duit a bheith de chumhacht amach roimh touching chuid leictreacha.

- À baol turraing leictreach nó tine.

À dteagmháil píopa cuisneán agus píopa uisce nó aon chodanna inmheánacha cé go bhfuil an t-aonad ag feidhmiú nó díreach tar éis oibriú.

- À baol dó nó reo frithe, díobháil phearsanta.

À tá tú teagmháil an píopa nó codanna inmheánach, ba cheart duit a bheith a chaitheamh le cosaint nó fanacht am chun filleadh ar an teocht an gnáth.

- Eachas sin, d'fhéadfadh sé ina chúis le dónna nó , díobháil phearsanta.

(IT) ⚠ AVVERTENZA

Non toccare le parti elettriche con le mani bagnate. Prima di toccare parti elettriche spegnere l'unità.

- Vi è il rischio di scossa elettrica o incendio.

Non toccare il tubo del refrigerante e il tubo dell'acqua o le parti interne mentre l'unità è in funzione o subito dopo il funzionamento.

- Vi è il rischio di lesioni personali, ustioni o congelamento.

Se si tocca il tubo o le parti interne, si dovrebbe indossare una protezione o attendere che l'unità a temperatura normale.

- In caso contrario , ciò potrebbe provocare lesioni personali, ustioni o congelamenti.

(LV) ⚠ BRĪDINĀJUMS

Nepieskarieties elektriskajām daļām ar mitrām rokām. Pirms pieskaraties elektriskai daļai, atslēdziet strāvu.

- Pastāv elektriskās strāvas trieciena vai ugunsgrēka risks.

Nepieskarieties aukstumaģenta caurulei un ūdens caurulei vai iekšējām daļām, kamēr ierīces darbojas vai uzreiz pēc tās darbības.

- Pastāv apdegumu, apsaldējumu vai traumu risks.

Pieskaroties caurulei vai iekšējām daļām, jālieto aizsargtērps vai jānogaida, līdz ierīces temperatūras atgriežas normas robežās.

- Pretējā gadījumā pastāv apdegumu, apsaldējumu vai traumu risks.

(LT) ⚠ ĮSPĖJIMAS

Nelieskite elektroninių dalių šlapiomis rankomis. Išjunkite įrenginį prieš liesdami elektronines dalis.

- Kyla elektros šoko arba gaisro pavojus.

Nelieskite šaldalo bei vandens vamzdžių ar vidinių dalių kol įrenginys atlieka darbą ar tuojau pat po darbo atlikimo.

- Galite nušalti ar susižaloti.

Jeigu liesitės prie vamzdžių ar vidinių dalių, pasirūpinkite apsauga arba palaukite kurį laiką, kol temperatūra bus normali.

- Kitaip galite nušalti ar susižaloti.

(MK) ⚠ ПРЕДУПРЕДУВАЊЕ

Да не ги фаќате електричните делови со мокри раце. Треба прво да ја исклучите струјата пред да ги допирате електричните делови.

- Постои опасност од струен удар или пожар.

Да не ја допирате цевката за средство за ладење или внатрешни делови додека работи единицата или веднаш по работењето.

- Постои опасност од изгореници или замрзнатини, телесна повреда.

Ако ја допрете цевката или внатрешни делови, треба да носите заштитна опрема или да почекате да се се врати на нормална температура.

- Инаку, може да предизвика изгореници или замрзнатини и телесна повреда.

(MT) ⚠ TWISSIJA

Tmiss l-ebda parti elettrika b'idejn imxarrba. Trid tkun tfejt l-elettriku qabel tmiss il-parti elettrika.

- Hemm riskju ta' xokk elettriku jew nirien.

Tmissx il-pajp tar-refrigerant u l-pajp tal-ilma jew kwalunkwe parti fuq ġewwa waqt li t-tagħmir ikun mixgħul jew immedjatament wara li titfih.

- Hemm riskju ta' ħruq jew infjammazzjoni bil-ksieħ, korriment personali.

Jekk tmiss il-pajp jew partijiet ta' ġewwa, jeħtieġ li tilbes ilbies protettiv jew tistenna sakemm it-temperatura tiġi lura għan-normal.

- Inkella, dan jista' jikkawża ħruq jew infjammazzjoni bil-ksieħ, korriment personali.

(NO) ⚠ ADVARSEL

De elektriske delene må ikke berøres med våte hender, strømtilførselen må slås av før berøring. Strømmen skal slås av før du rører elektriske deler.

- Det er fare for elektrisk støt eller brann.

Kjølerøret og vannrøret eller andre indre deler må ikke berøres mens enheten er i gang eller umiddelbart etter bruk.

- Det er risiko for brannskade eller frostbitt, personskade.

Hvis du må ta på røret eller andre indre deler, bruk verneutstyr eller vent til temperaturen har gått ned.

- Hvis ikke kan det forårsake brannskader eller frostskader, og personlige skader.

(PL) ⚠ OSTRZEŻENIE

Nie dotykać żadnej części elektrycznej mokrymi rękami. Przed dotknięciem części elektrycznej należy odciąć zasilanie.

- Występuje ryzyko porażenia elektrycznego lub pożaru.

Nie wolno dotykać rury z czynnikiem chłodzącym, rury z wodą oraz żadnej części wewnętrznej podczas gdy urządzenie pracuje lub zaraz po jego wyłączeniu.

- Występuje ryzyko oparzenia odmrożenia lub zranienia.

Jeżeli musisz dotknąć rurę lub elementy wewnętrzne, należy uprać ubranie ochronne lub odczekać, aż osiągną odpowiednią temperaturę.

- W przeciwnym razie może dojść do oparzenia odmrożenia lub zranienia.

(PT) ⚠ AVISO

Não toque em nenhuma peça eléctrica com as mãos molhadas. Deve desligar a alimentação antes de tocar na parte elétrica.

- Há o risco de incêndio ou de choque eléctrico.

Não toque no tubo de refrigerante e na tubagem de água ou em quaisquer peças internas, enquanto a unidade estiver em funcionamento ou imediatamente após o funcionamento.

- Existe o risco de queimaduras ou congelação, ferimentos pessoais.

Se tocar no tubo ou nas peças internas, deve usar óculos de protecção ou esperar o tempo suficiente para voltar à temperatura normal.

- Caso contrário, pode provocar queimaduras ou congelação, ferimentos pessoais.

(RO) ⚠ AVERTISMENT

Nu atingeţi nicio componentă electrică cu mâinile ude. Trebuie să opriţi alimentarea electrică înainte de atingerea componentei electrice.

- Există riscul de electroşoc sau incendiu.

Nu atingeţi ţeava pentru agentul termic şi ţeava de apă sau vreo componentă internă în timp ce unitatea funcţionează sau imediat după funcţionare.

- Există riscul de arsuri sau degerătură, sau de vătămare corporală.

Dacă atingeţi ţeava sau componentele interne, trebuie să purtaţi protecţie sau să aşteptaţi revenirea la temperatura normală.

- În caz contrar, acest lucru poate cauza arsuri sau degerătură, sau vătămare personală.

(SR) ⚠ UPOZORENJE

Ne dodirujte električne delove vlažnim rukama. Trebalo bi da isključite napajanje pre nego što imate dodir sa električnim delovima.

- Postoji rizik od strujnog udara ili požara.

Ne dodirujte cev za rashladno sredstvo i cev za vodu ili unutrašnje delove dok uređaj radi ili neposredno nakon prekida rada.

- Postoji opasnost od opekotina ili promrzlina, telesnih ozleda.

Ako dodirujete cev ili unutrašnje delove, trebalo bi da nosite zaštitnu opremu ili da sačekate neko vreme dok se temperatura ne vrati na normalu.

- U suprotnom postoji opasnost od opekotina ili promrzlina, odnosno telesnih ozleda.

(SK) ⚠ UPOZORNENIE

Nedotýkajte sa žiadnej elektrickej časti mokrými rukami. Pred dotykom elektrickej časti vypnite napájanie.

- Hrozí riziko zásahu elektrickým prúdom a požiaru.

Nedotýkajte sa potrubia s chladivom a potrubia s vodou, ani žiadnej inej vnútornej časti, pokiaľ je jednotka v prevádzke alebo bezprostredne po jej vypnutí.

- Hrozí riziko popálenín alebo omrzlín, zranenia osôb.

Ak sa potrebujete dotknúť potrubí alebo inej vnútornej časti, mali by ste mať ochranný odev alebo počkať, kým sa jednotka nevráti na normálnu teplotu.

- V opačnom prípade môže dôjsť k popáleninám alebo omrzlinám, zraneniu osôb.

(SL) ⚠ OPOZORILO

Ne dotikajte se električnih delov z mokrimi rokami. pred dotikanjem električnih delov morate izklopiti napajanje.

- Obstaja nevarnost udara električnega toka ali požara.

Ne dotikajte se cevi za hladilno tekočino in cevi za vodo ali katerihkoli notranjih delov medtem, ko enota deluje, ali takoj po delovanju.

- Obstaja možnost opeklin, ozeblin in telesne poškodbe.

Če se dotikate cevi ali notranjih delov, morate nositi zaščito ali počakati, da se enota povrne v normalno temperaturo.

- Sicer obstaja možnost opeklin, ozeblin in telesne poškodbe.

(ES) ⚠ ADVERTENCIA

No toque ninguna parte eléctrica con las manos mojadas. Desconecte la alimentación eléctrica antes de tocar las partes eléctricas.

- Existe riesgo de descarga eléctrica o incendio.

No toque el tubo de refrigerante y el tubo del agua o cualquier parte interna con la unidad en funcionamiento o inmediatamente después de su parada.

- Existe riesgo de lesiones, quemaduras o congelación.

Si toca el tubo o las partes internas, deberá utilizar protección o esperar a que hayan recuperado la temperatura normal.

- De lo contrario, podría sufrir quemaduras, congelaciones o lesiones.

(SV) ⚠ VARNING

Vidrör inga elektriska delar med fuktiga händer. Se till att strömmen är avstängd innan du vidrör elektriska delar.

- Risk för elstöt eller brand föreligger.

Vidrör ej kylmedels- eller vattenrör eller några interna delar när enheten är i drift eller omedelbart därefter.

- Risk för bränn-, köld- och personskador föreligger.

Om du vidrör rör eller interna delar bör du bära skyddsutrustning eller vänta tills enheten återgått till normal temperatur.

- I annat fall föreligger risk för bränn-/frostskador eller personskador.

DISASSEMBLY GUIDE (1/11)

"Attention! Users should never attempt disassembly on their own! Please contact a professional!"

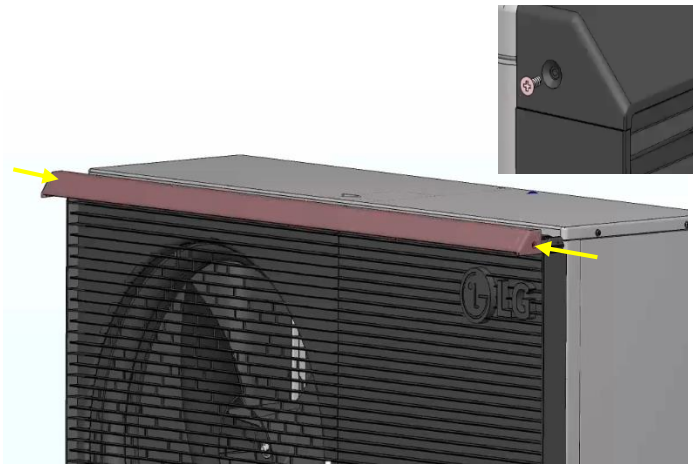

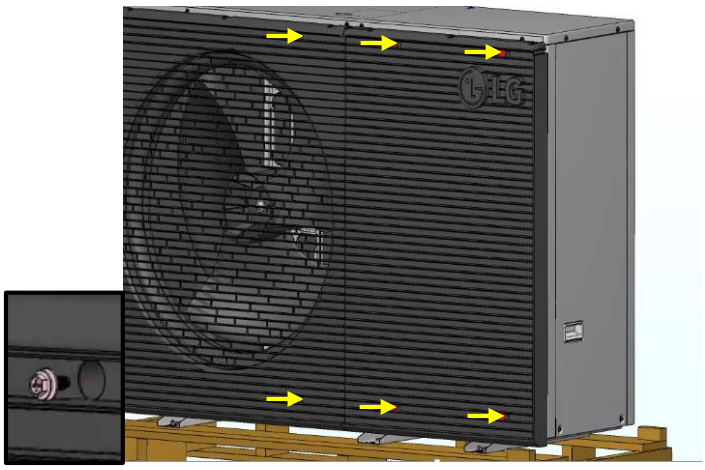

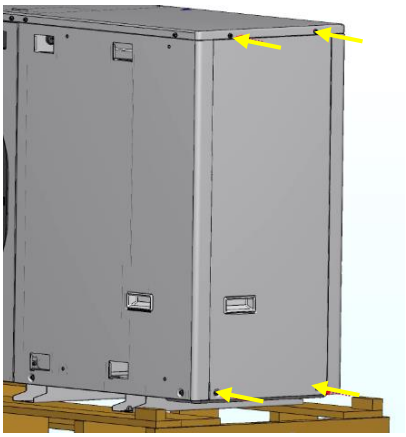

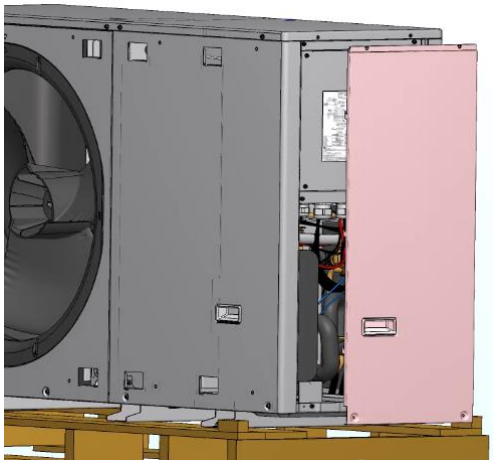

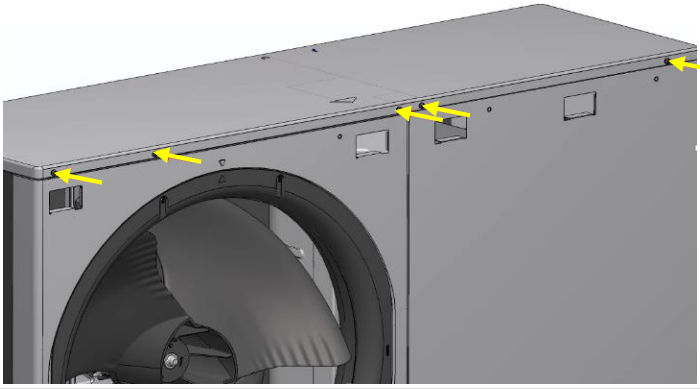

DISASSEMBLY GUIDE (2/11)

"Attention! Users should never attempt disassembly on their own! Please contact a professional!"

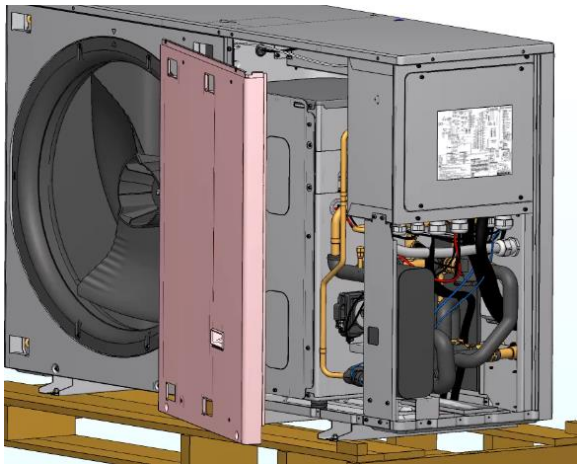

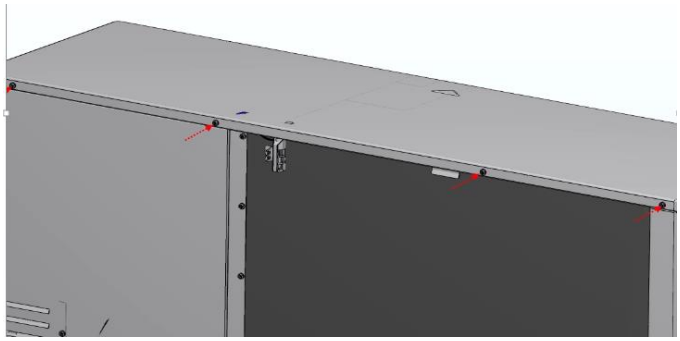

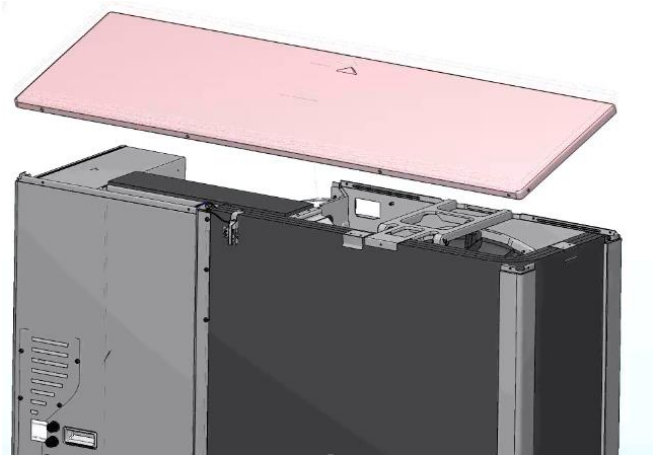

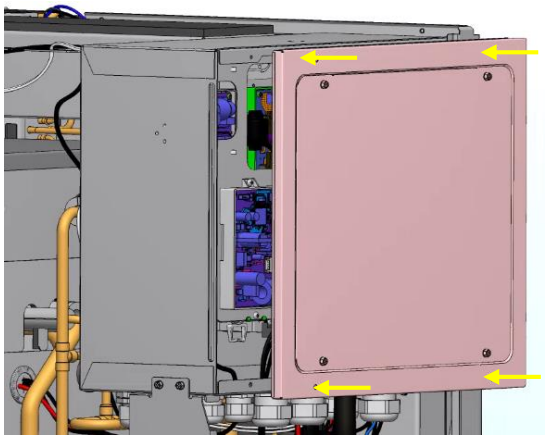

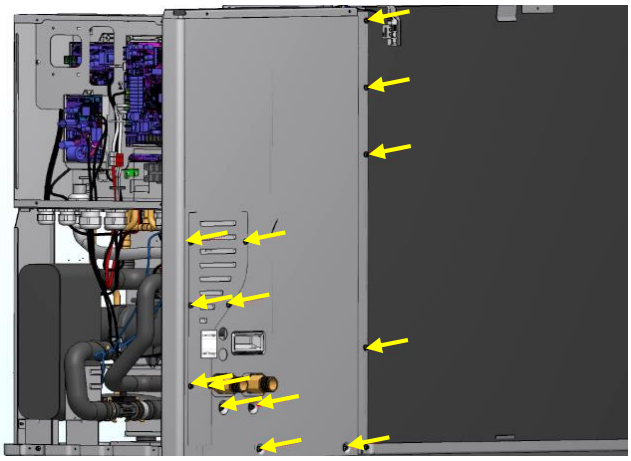

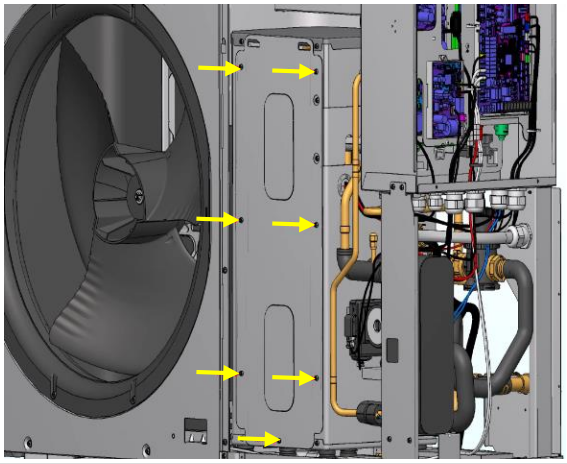

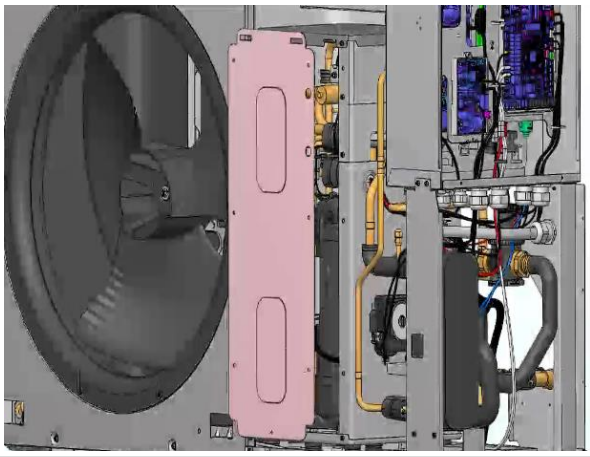

DISASSEMBLY GUIDE (3/11)

"Attention! Users should never attempt disassembly on their own! Please contact a professional!"

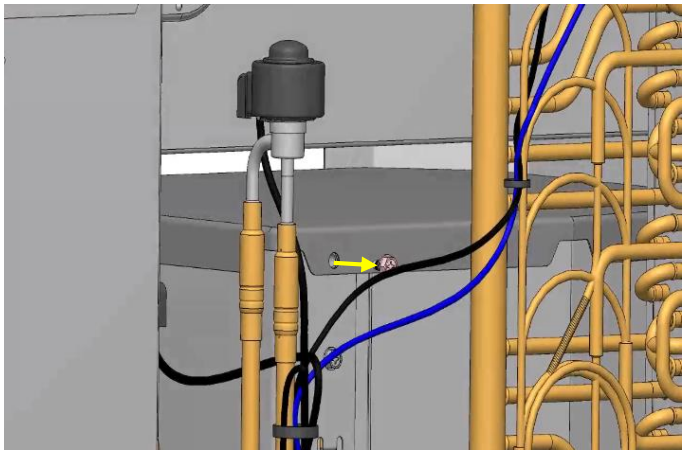

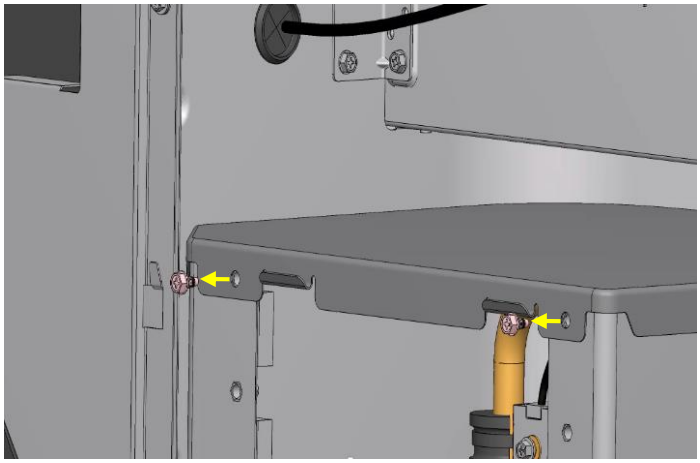

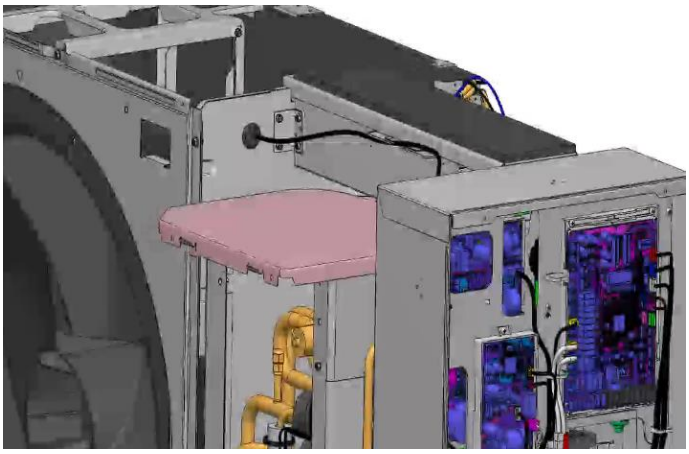

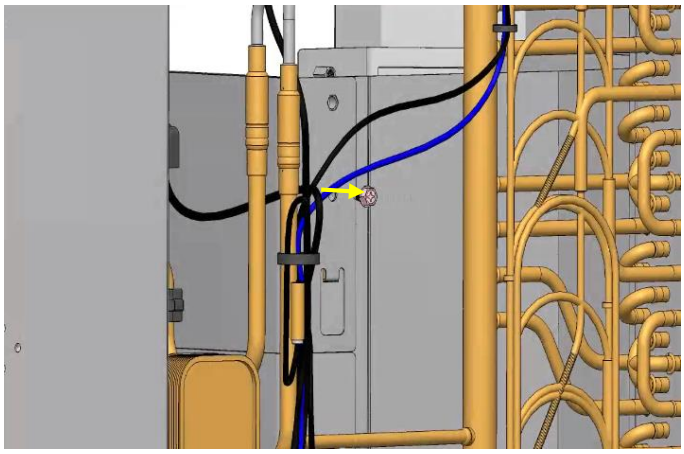

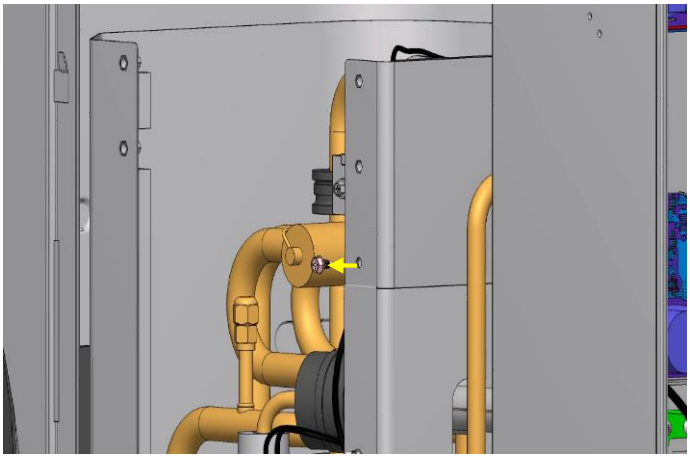

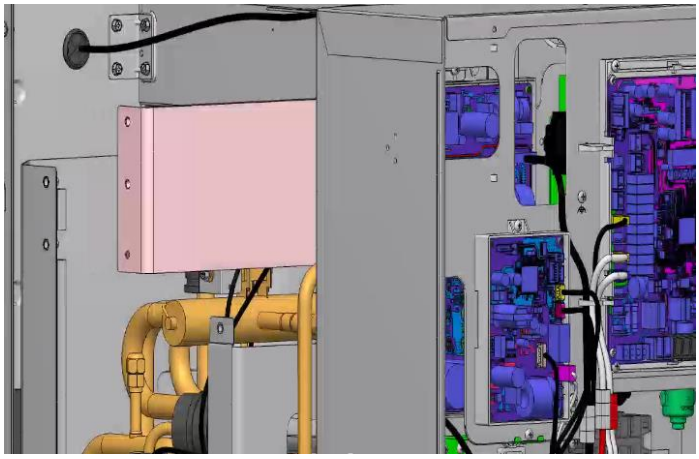

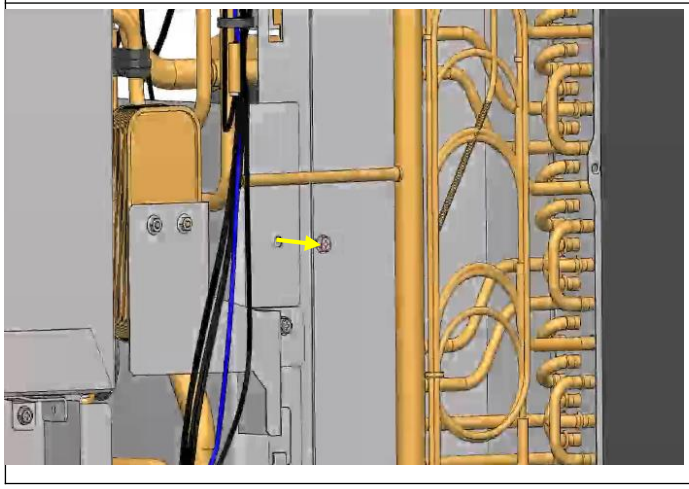

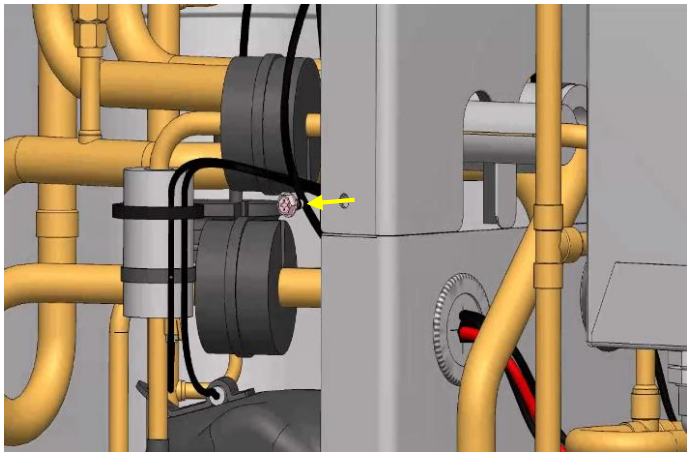

DISASSEMBLY GUIDE (4/11)

"Attention! Users should never attempt disassembly on their own! Please contact a professional!"

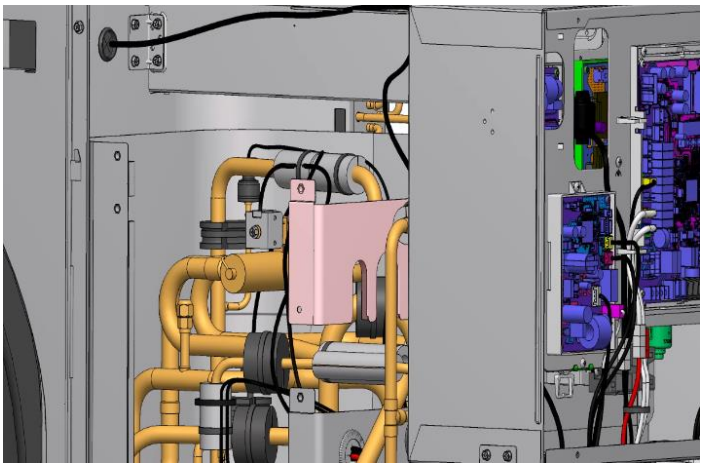

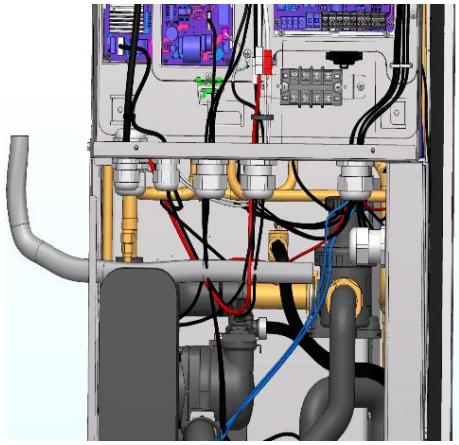

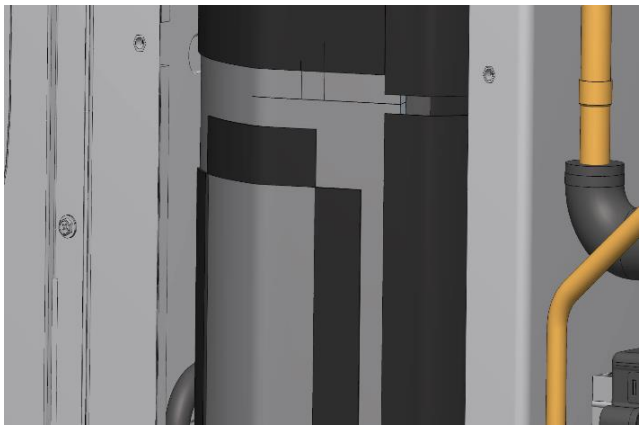

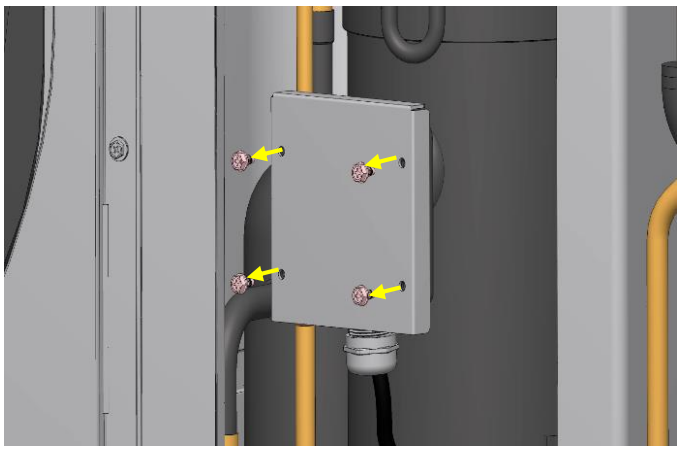

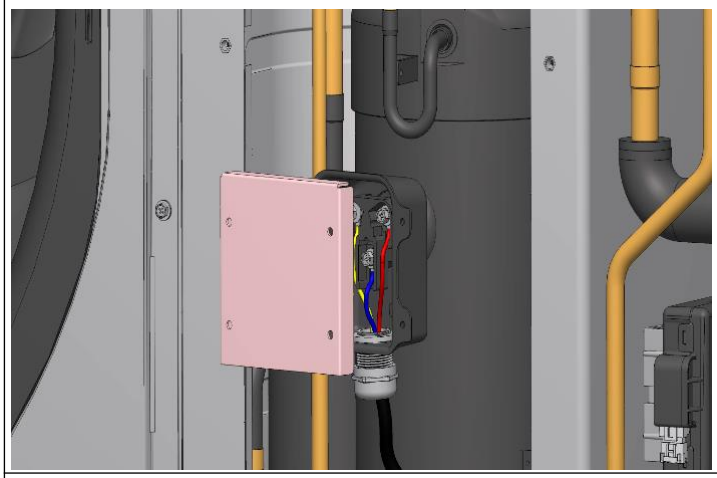

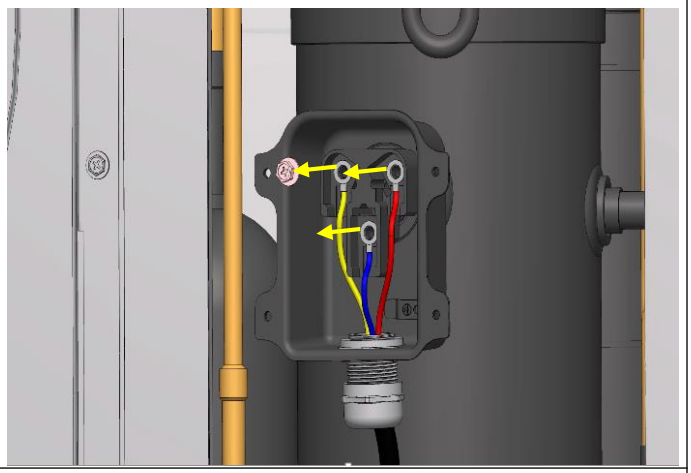

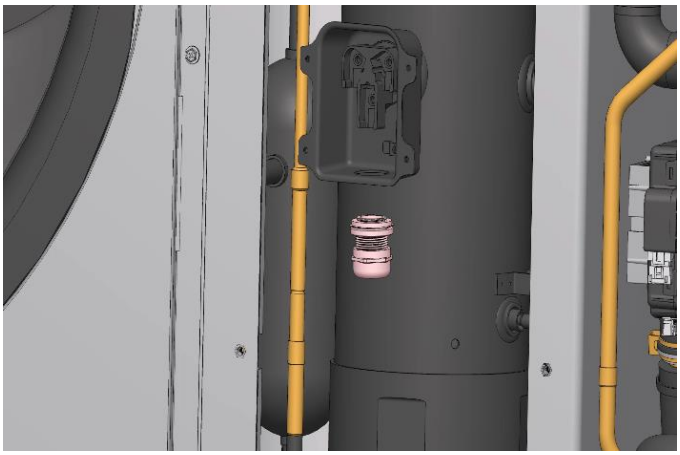

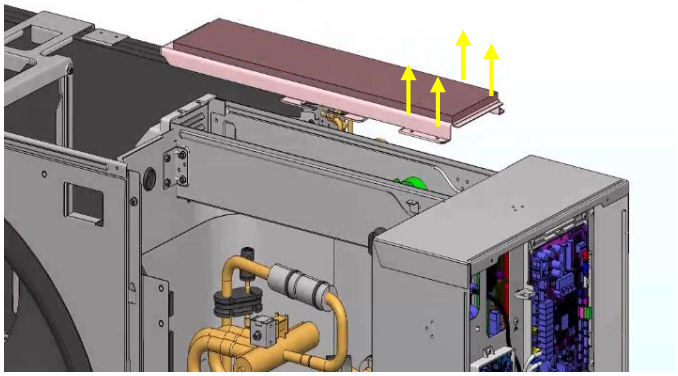

DISASSEMBLY GUIDE (5/11)

"Attention! Users should never attempt disassembly on their own! Please contact a professional!"

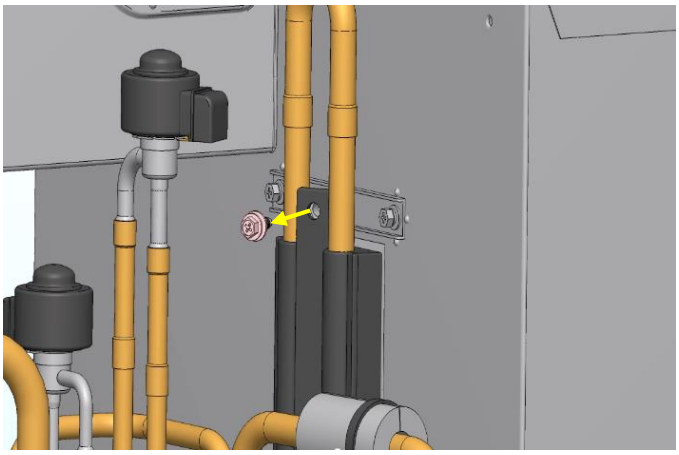

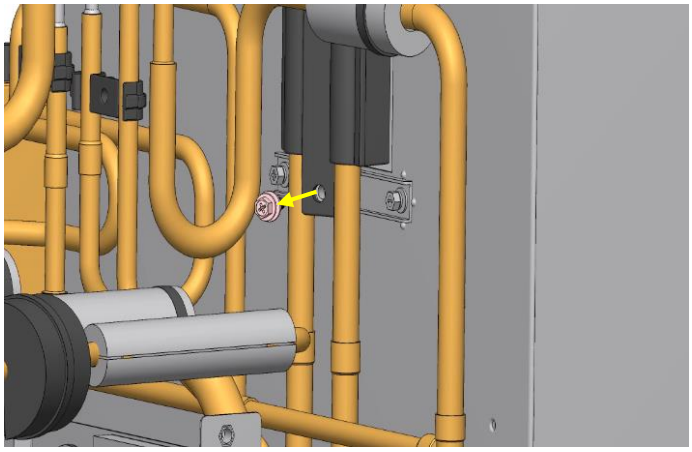

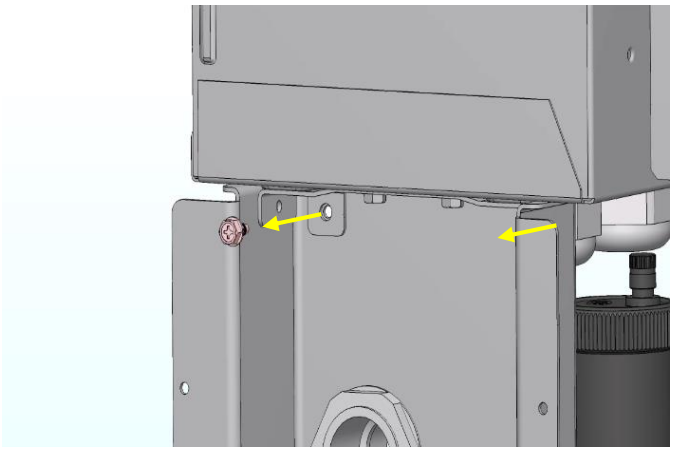

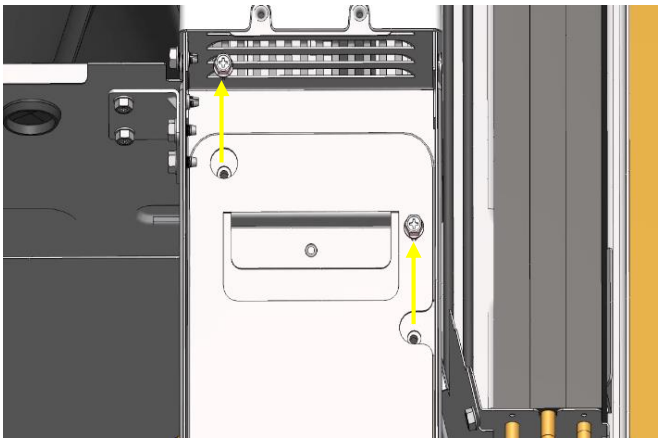

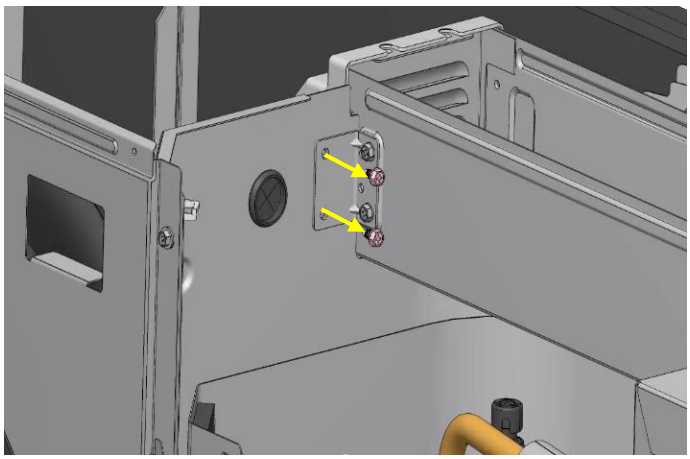

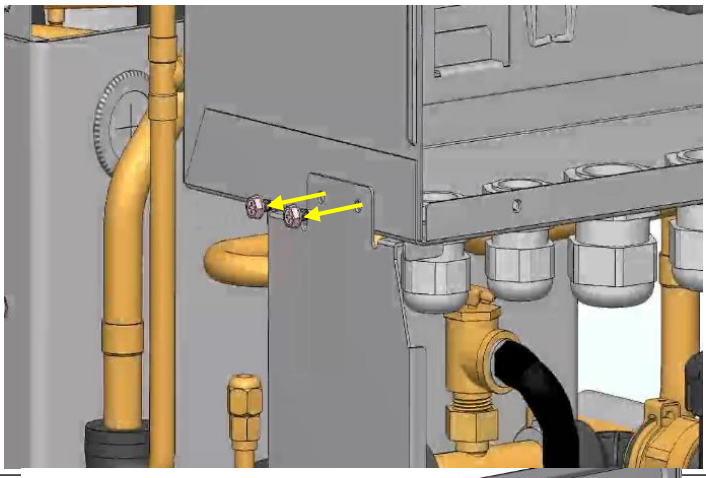

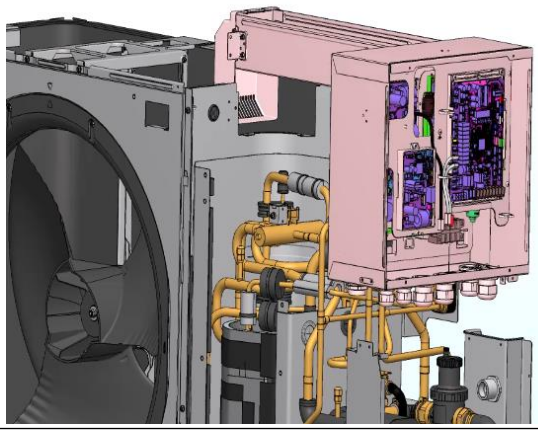

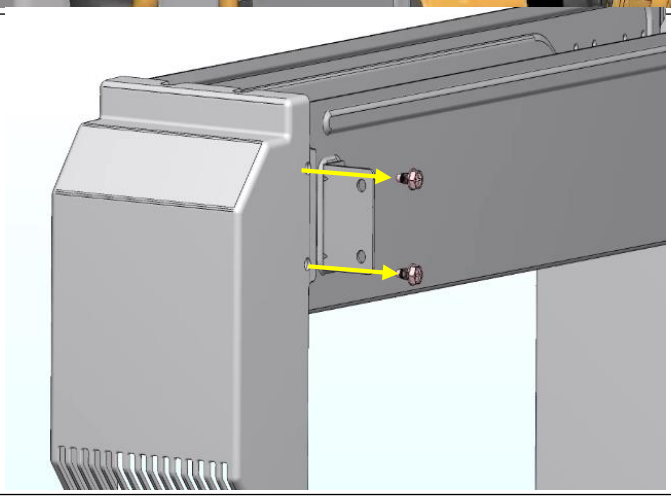

DISASSEMBLY GUIDE (6/11)

"Attention! Users should never attempt disassembly on their own! Please contact a professional!"

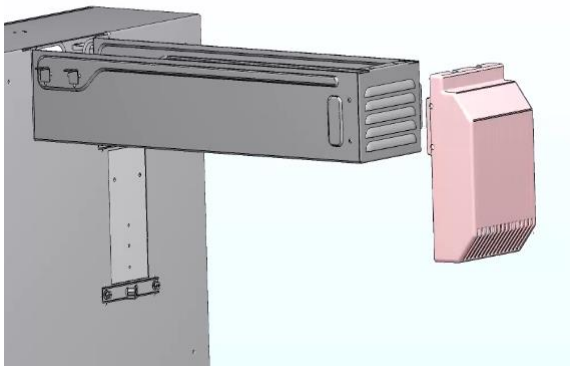

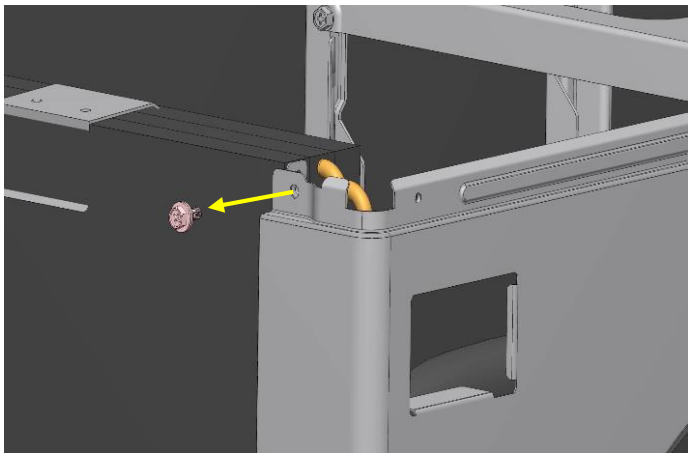

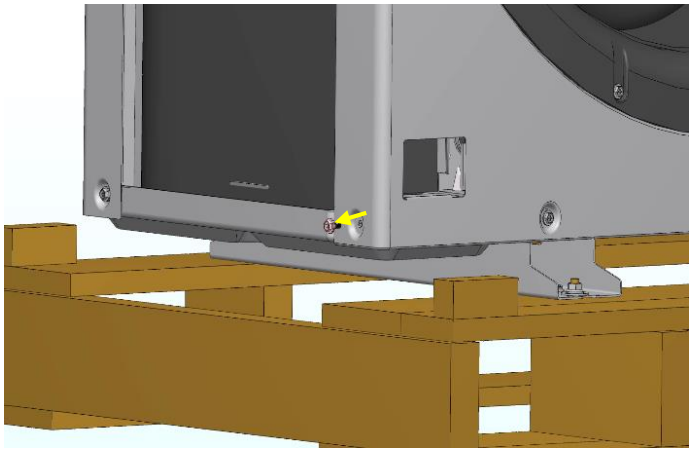

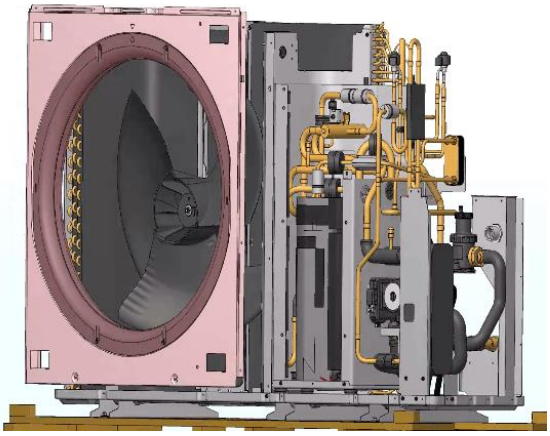

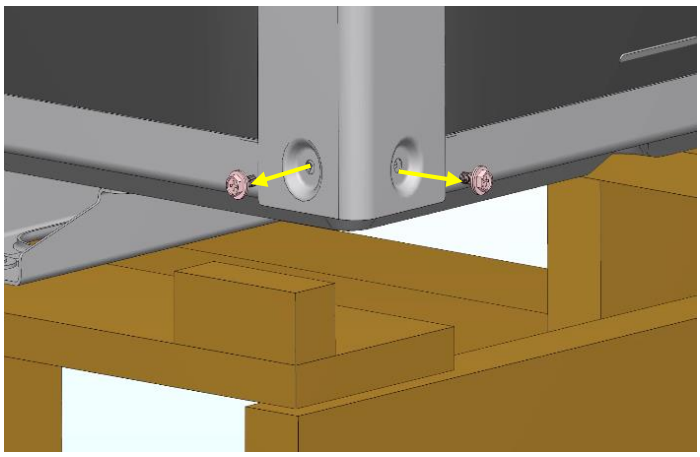

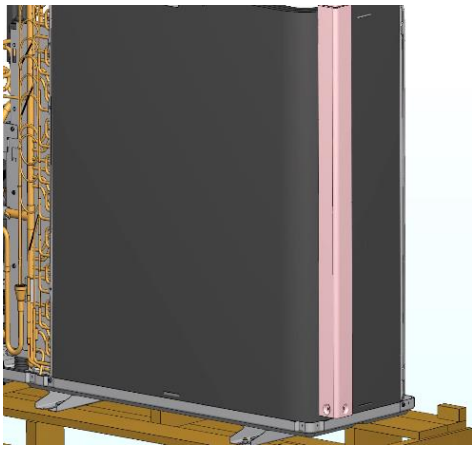

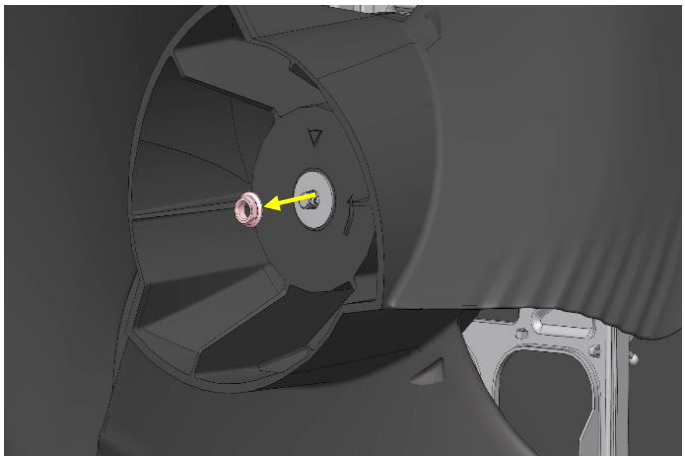

DISASSEMBLY GUIDE (7/11)

"Attention! Users should never attempt disassembly on their own! Please contact a professional!"

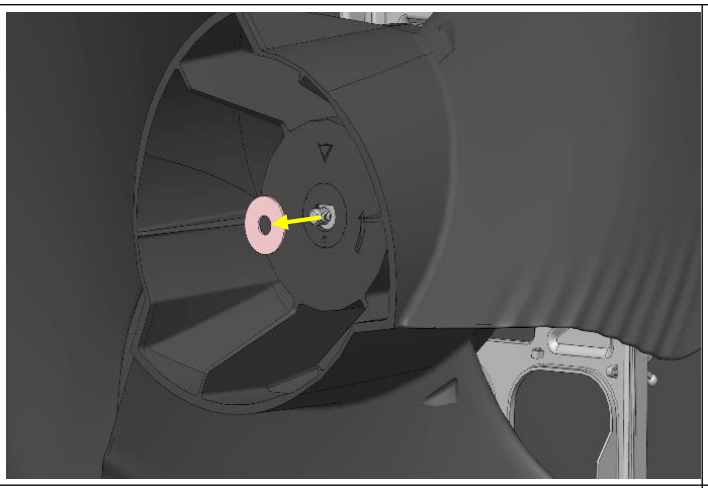

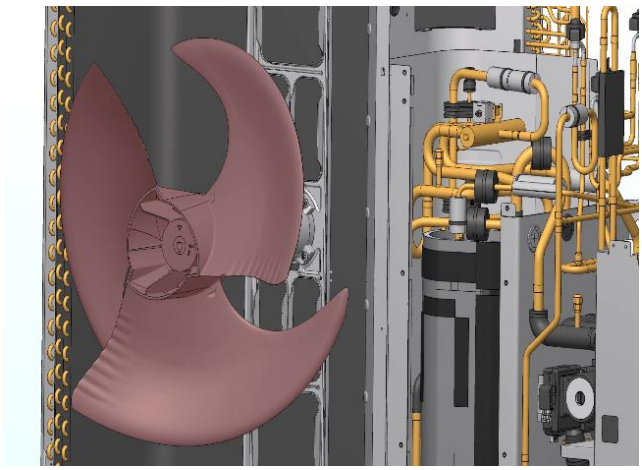

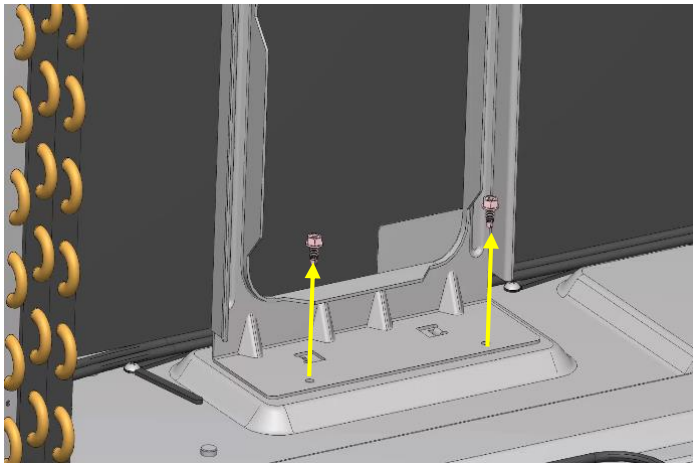

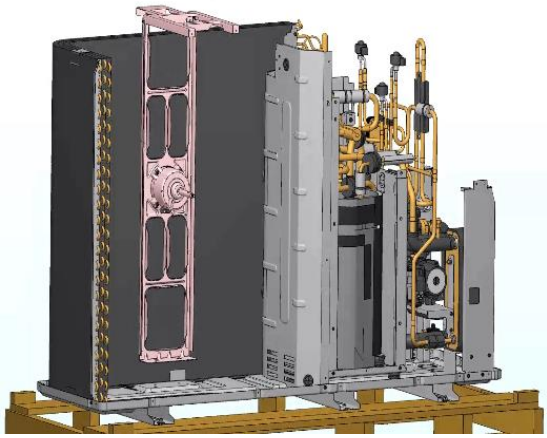

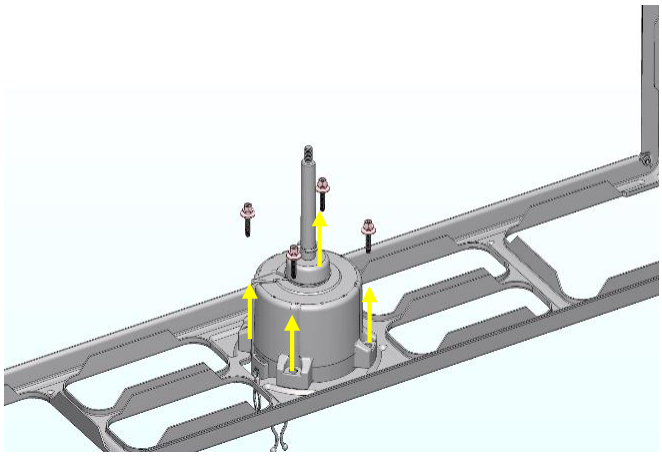

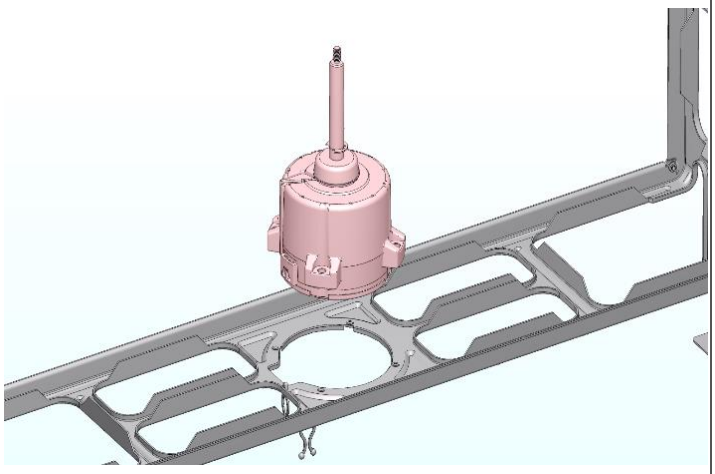

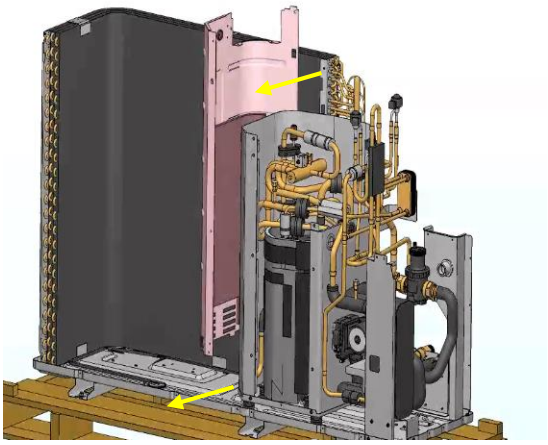

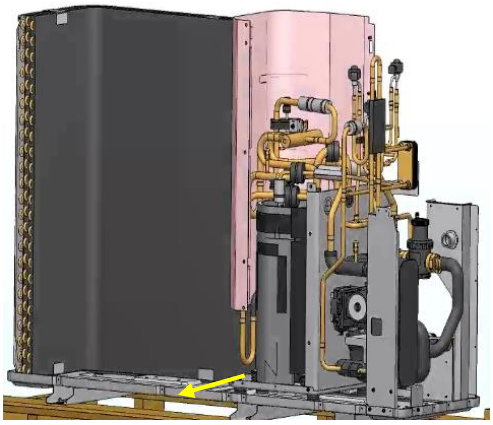

DISASSEMBLY GUIDE (8/11)

"Attention! Users should never attempt disassembly on their own! Please contact a professional!"

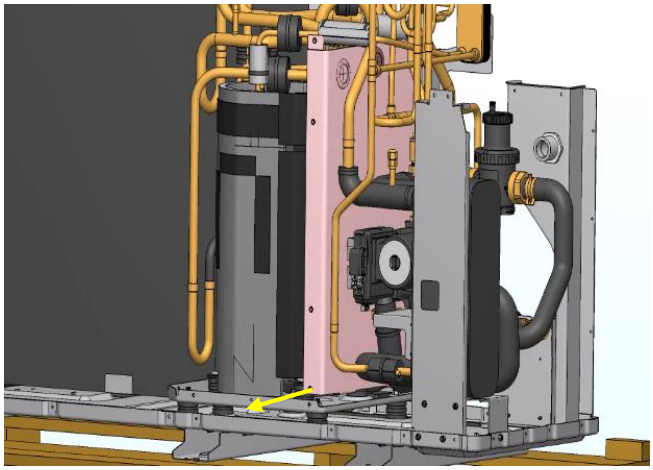

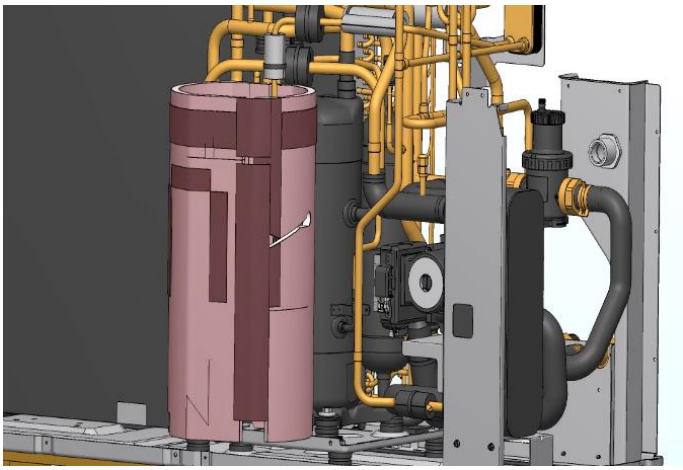

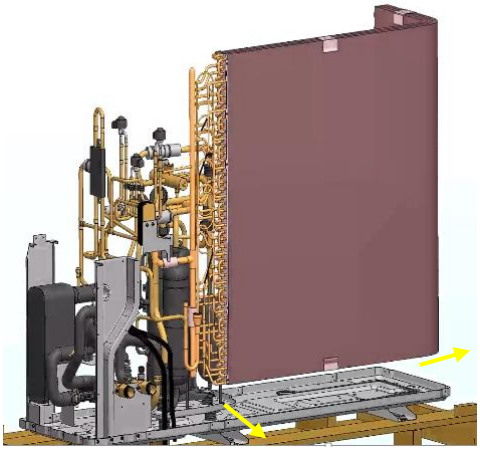

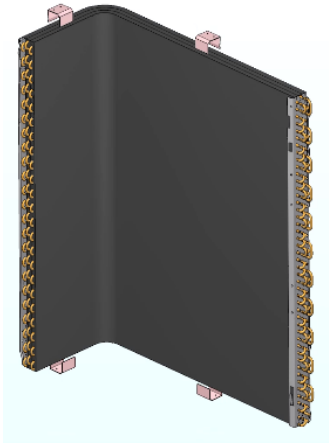

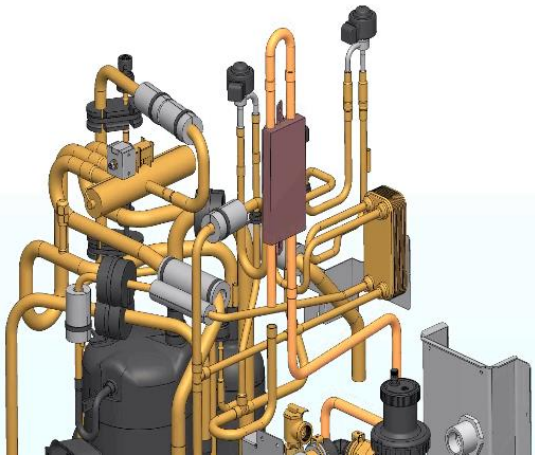

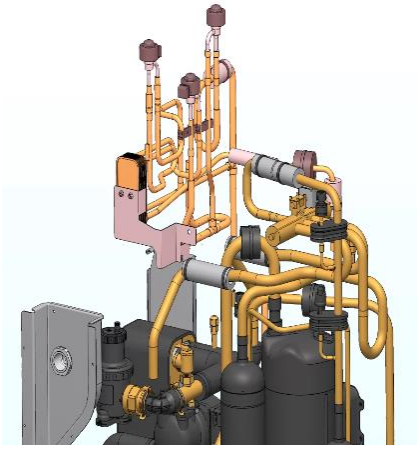

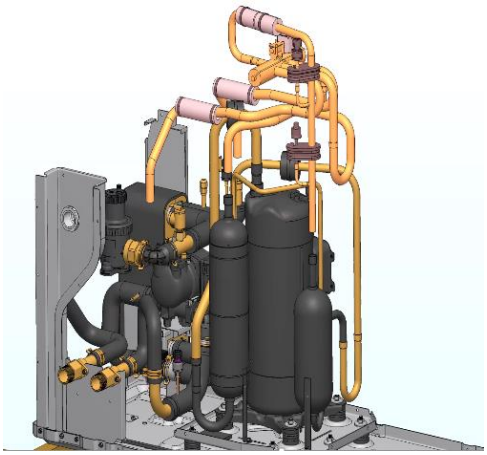

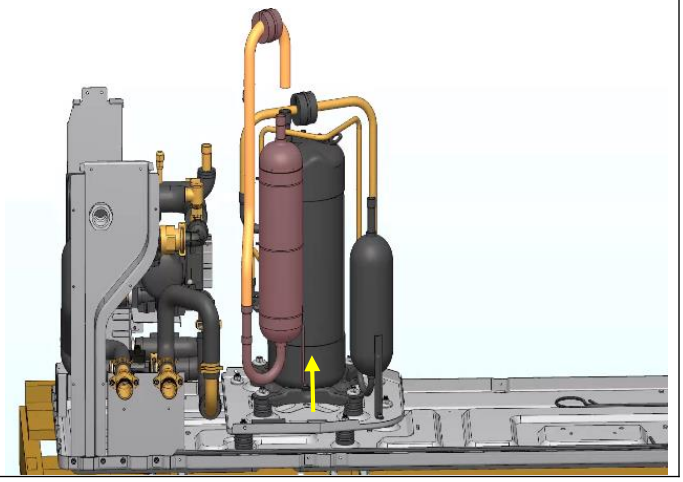

DISASSEMBLY GUIDE (9/11)

"Attention! Users should never attempt disassembly on their own! Please contact a professional!"

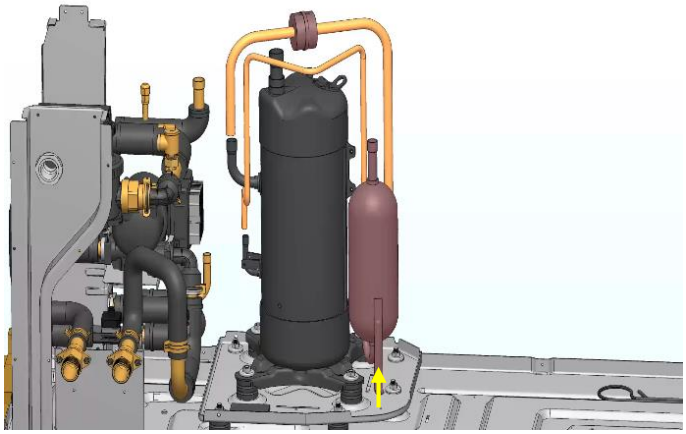

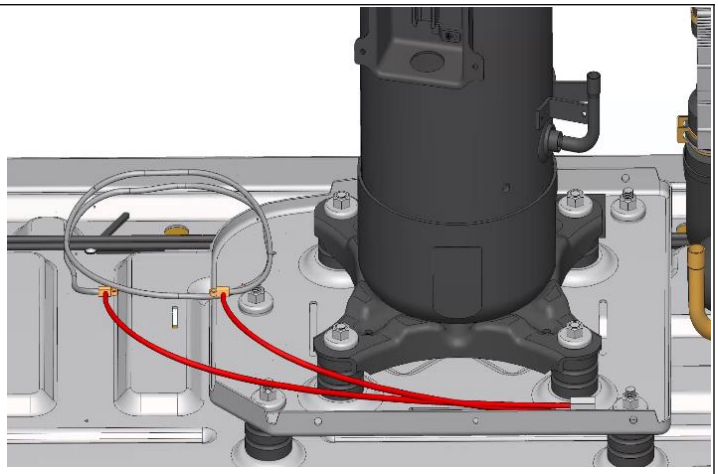

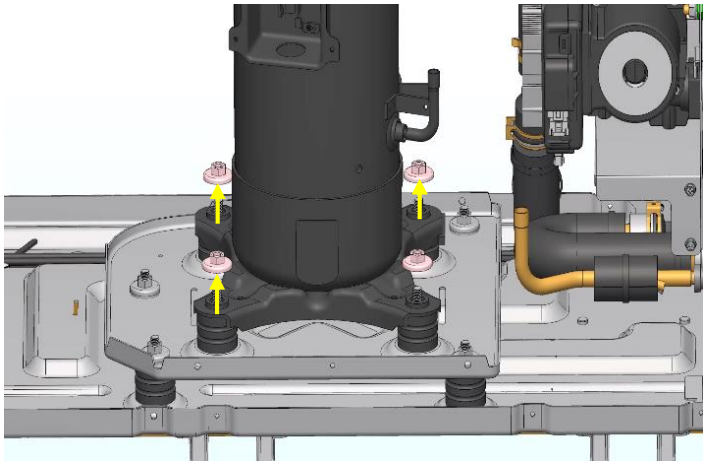

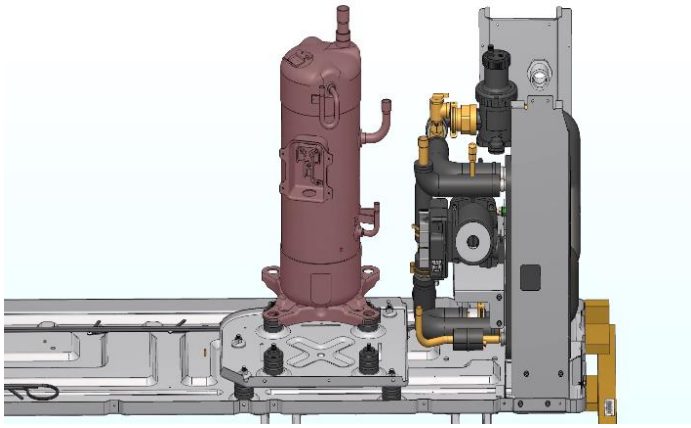

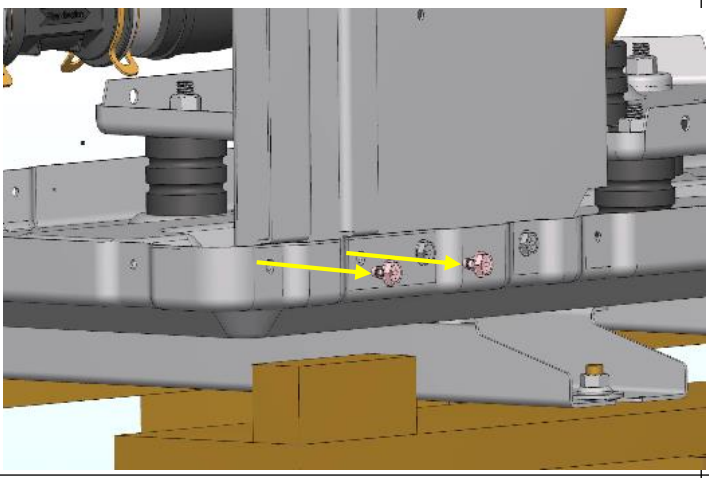

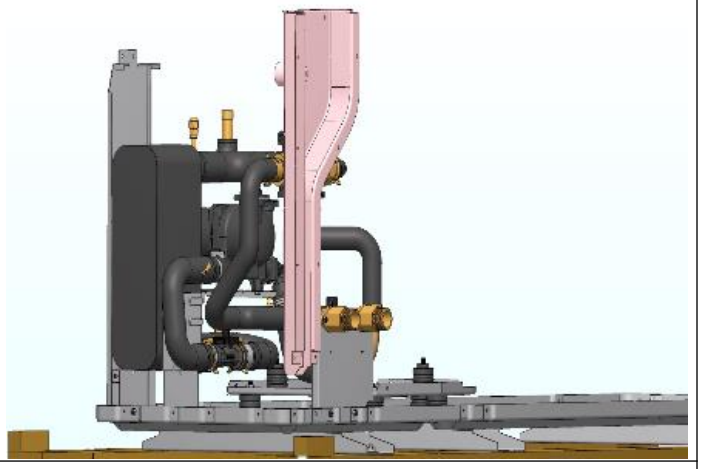

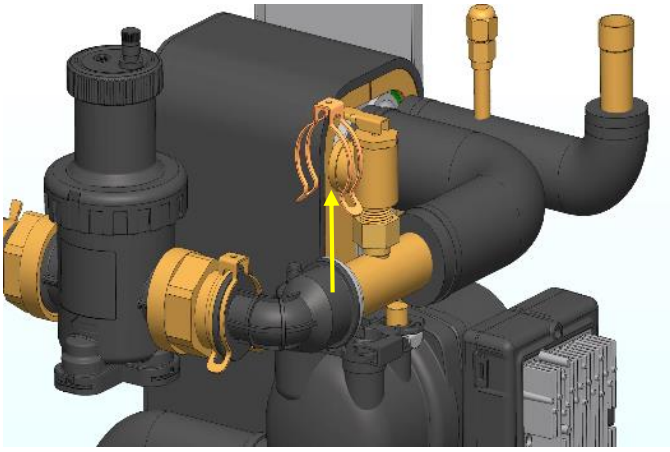

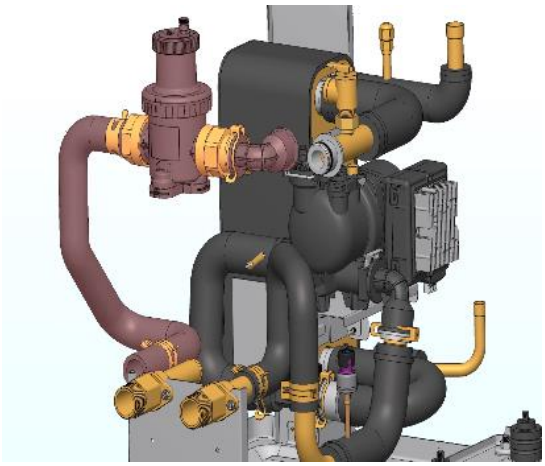

DISASSEMBLY GUIDE (10/11)

"Attention! Users should never attempt disassembly on their own! Please contact a professional!"

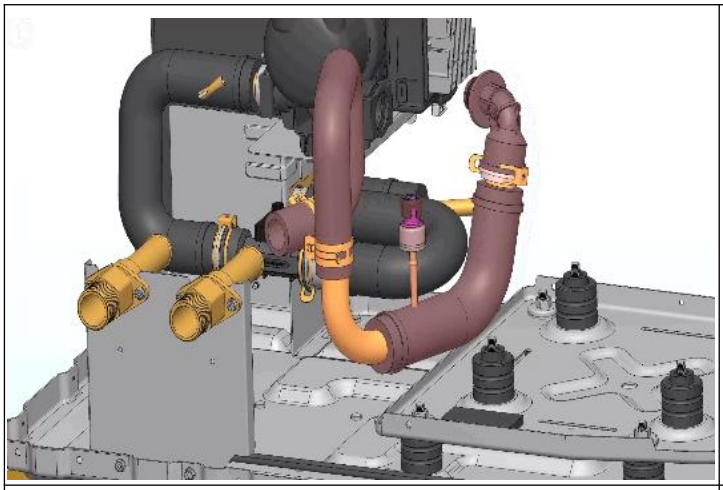

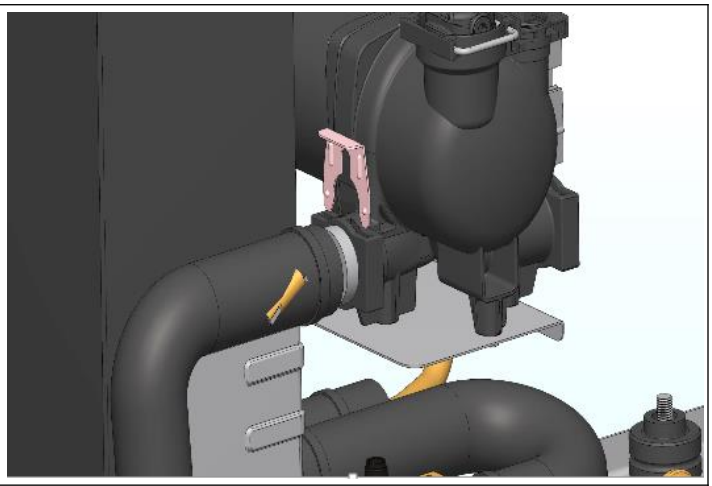

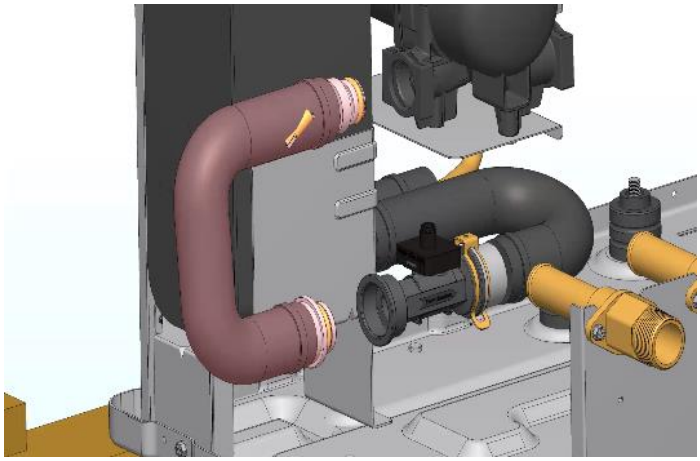

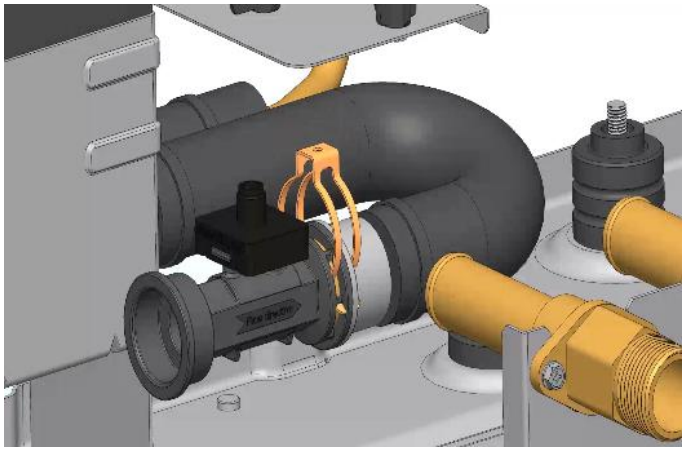

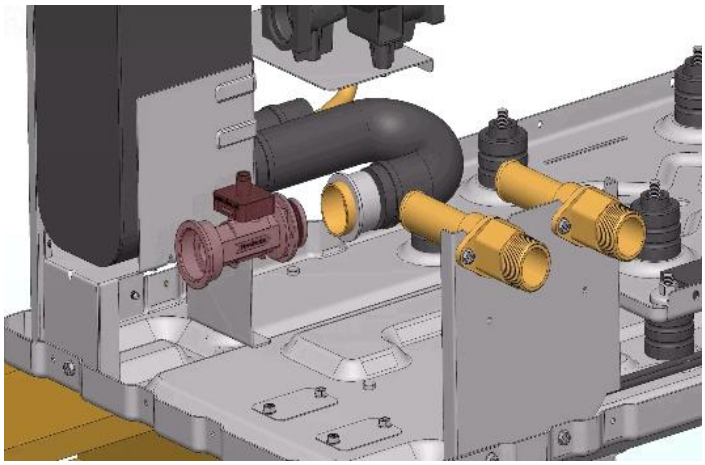

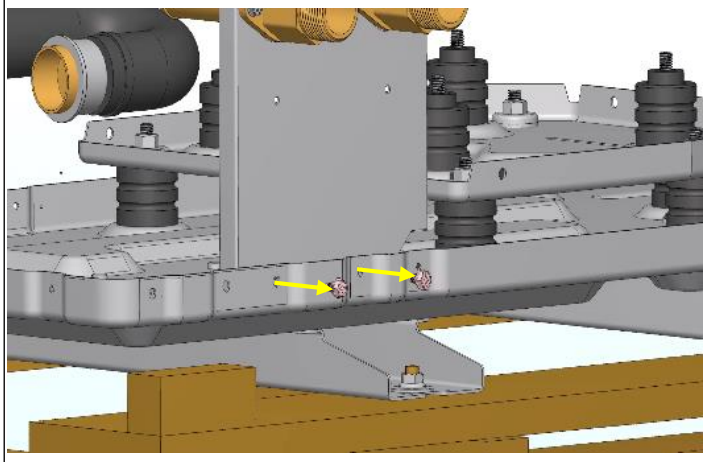

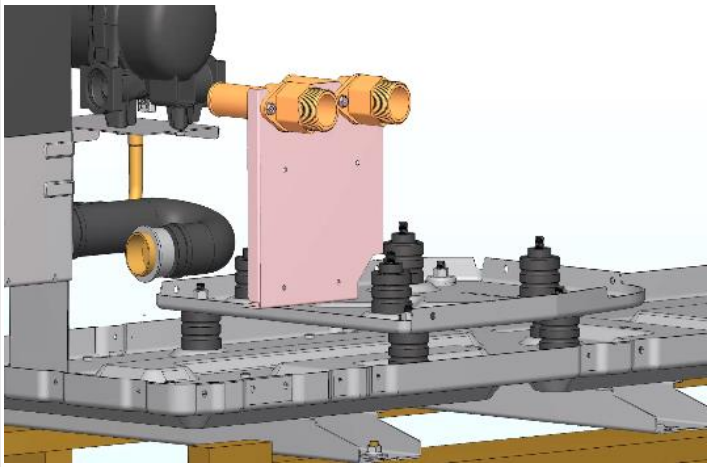

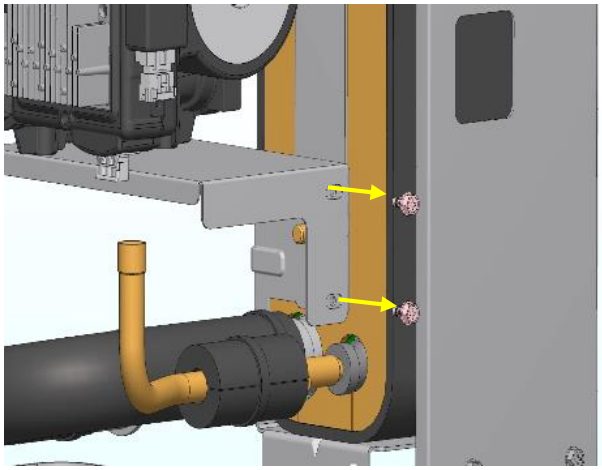

DISASSEMBLY GUIDE (11/11)

"Attention! Users should never attempt disassembly on their own! Please contact a professional!"

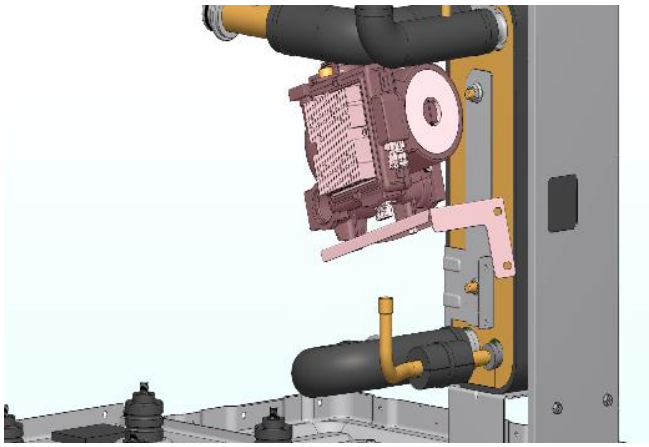

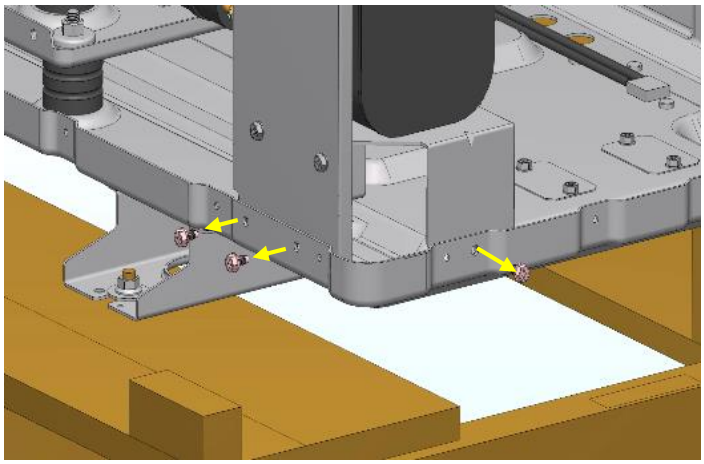

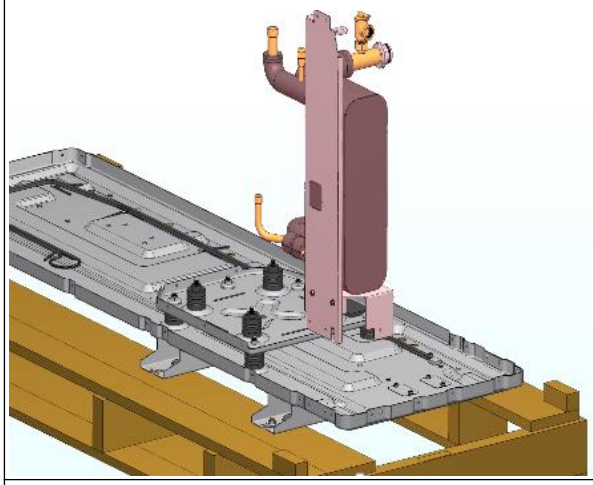

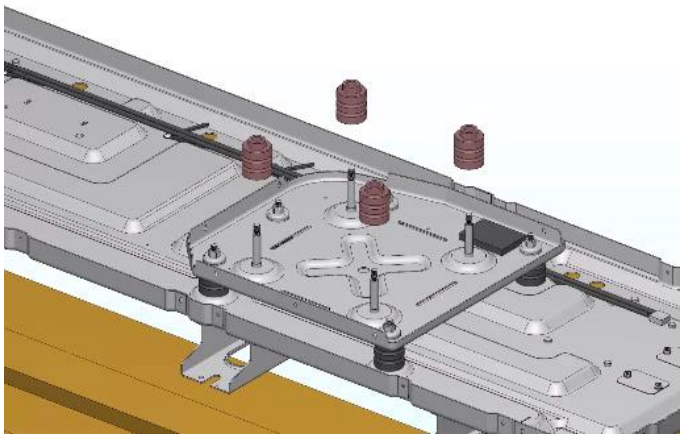

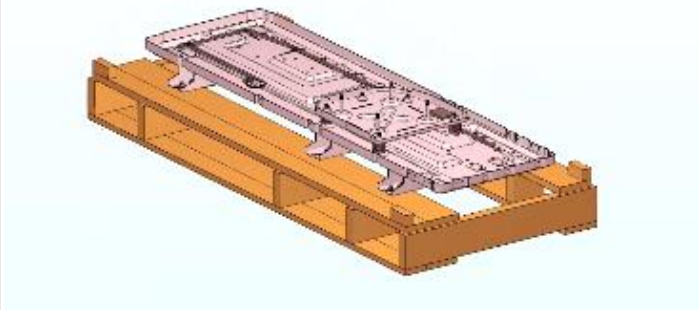

DISASSEMBLY GUIDE (1/2)

"Attention! Users should never attempt disassembly on their own! Please contact a professional!"

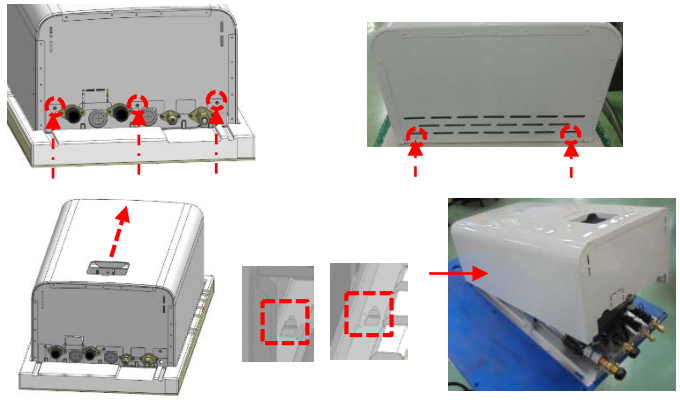

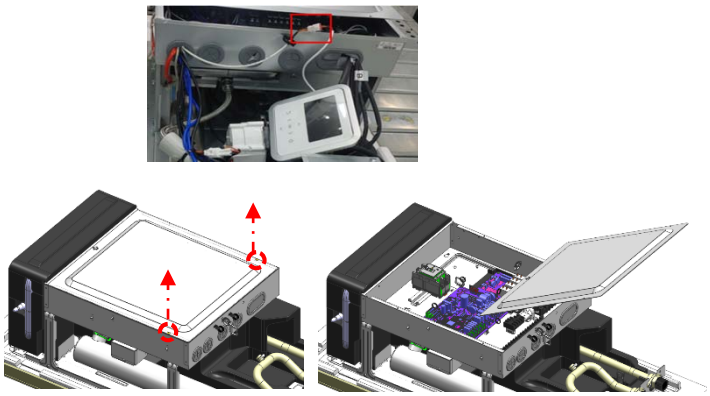

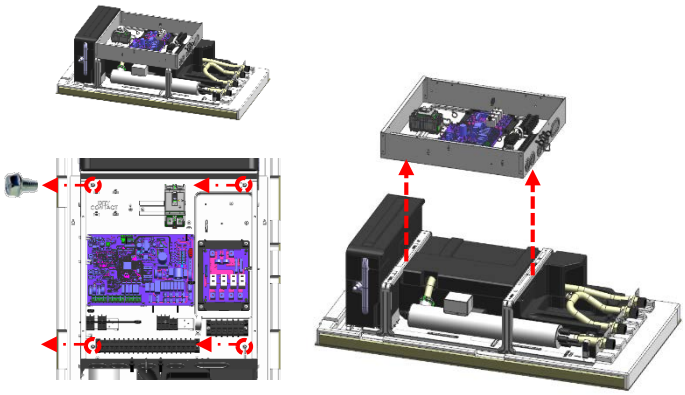

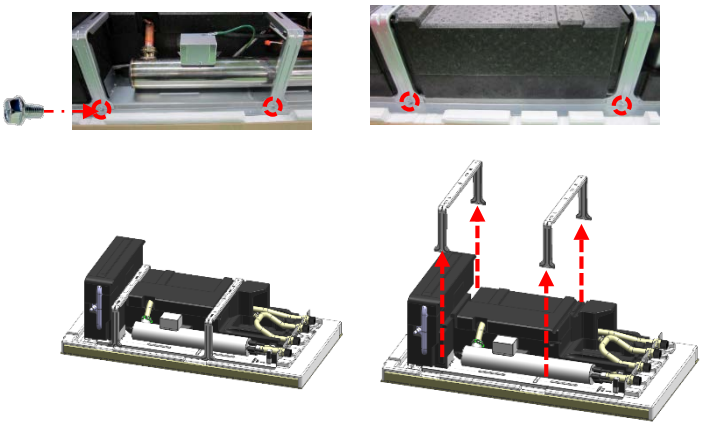

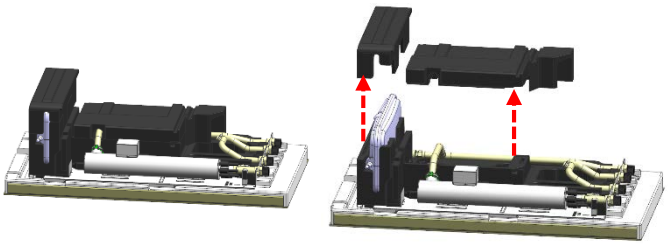

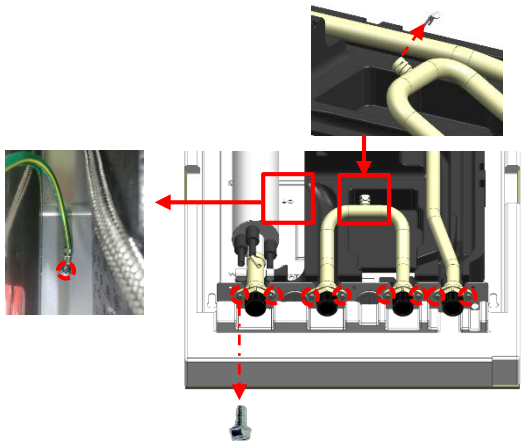

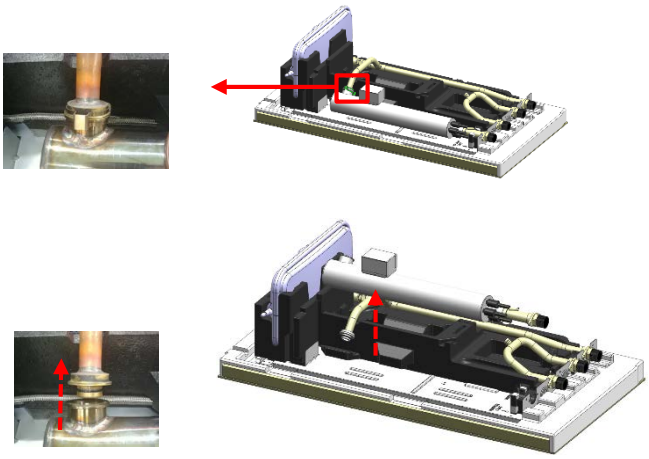

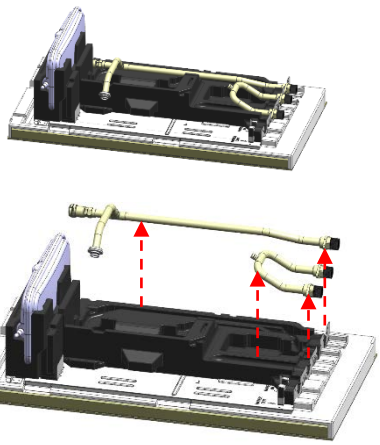

DISASSEMBLY GUIDE (2/2)

"Attention! Users should never attempt disassembly on their own! Please contact a professional!"

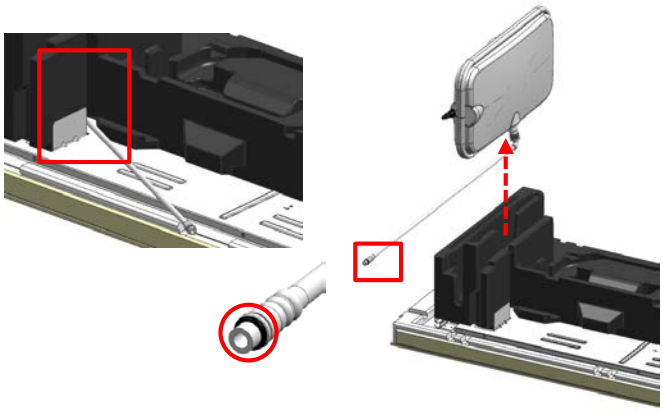

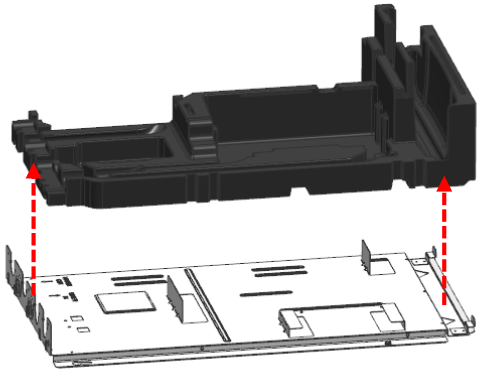

DISASSEMBLY GUIDE (1/2)

"Attention! Users should never attempt disassembly on their own! Please contact a professional!"

HN16XAHC NK1

⚠ WARNING

Do not touch any electric part with wet hands. you should be power off before touching electric part.

- There is risk of electric shock or fire.

Do not touch refrigerant pipe and water pipe or any internal parts immediately after turn off the unit.

- There is risk of burns or frostbite, personal injury.

If you touch the pipe or internal parts, you should be wear protection or wait time to return to normal temperature.

- Otherwise , it may cause burns or frostbite, personal injury.

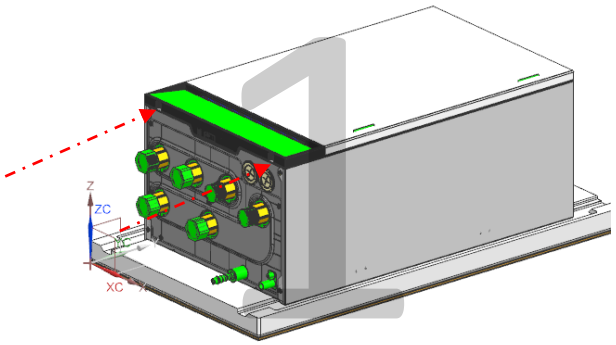

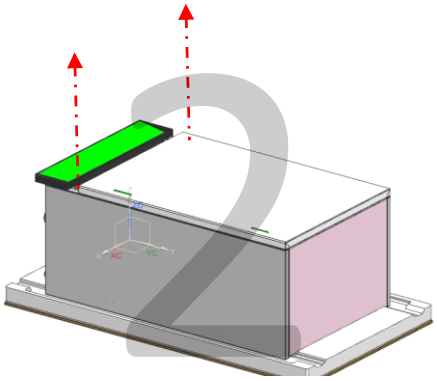

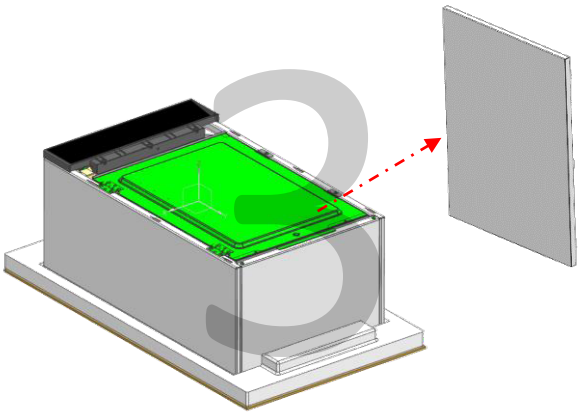

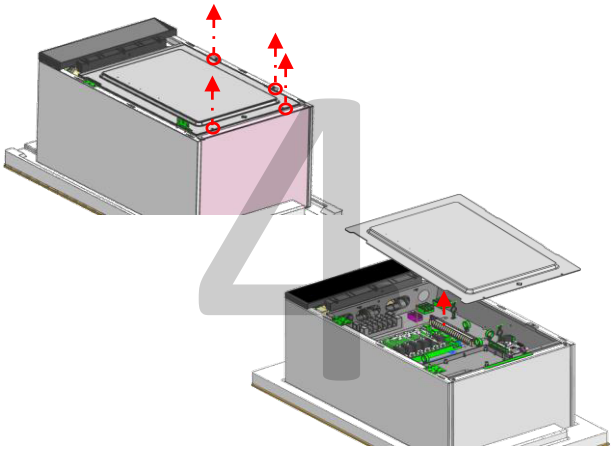

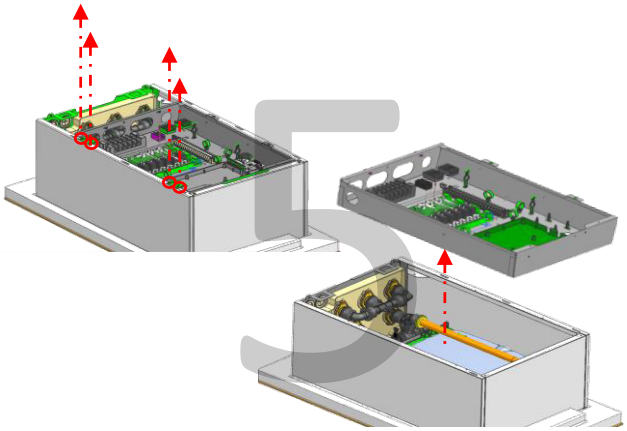

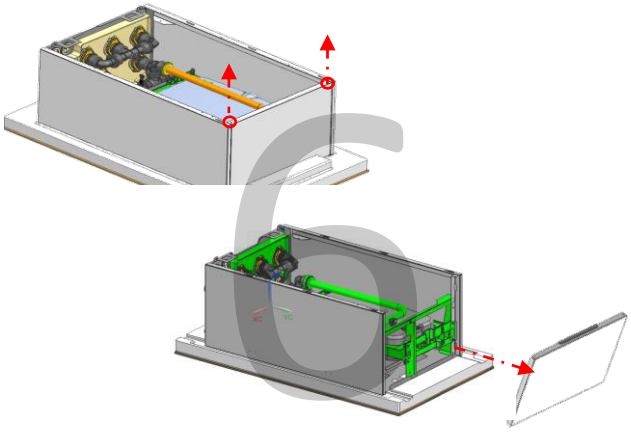

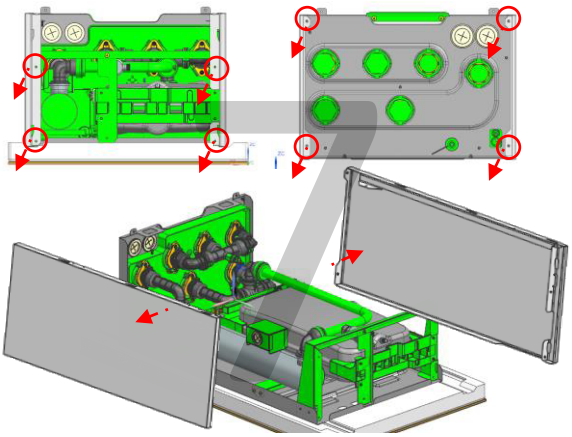

DISASSEMBLY GUIDE (2/2)

Attention! Users should never attempt disassembly on their own! Please contact a professional!

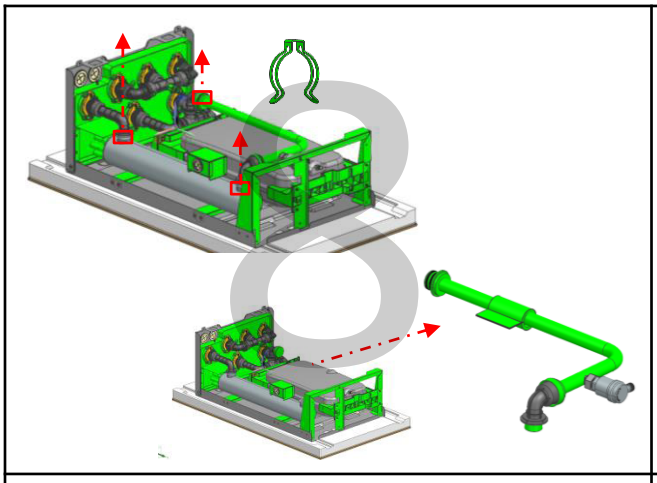

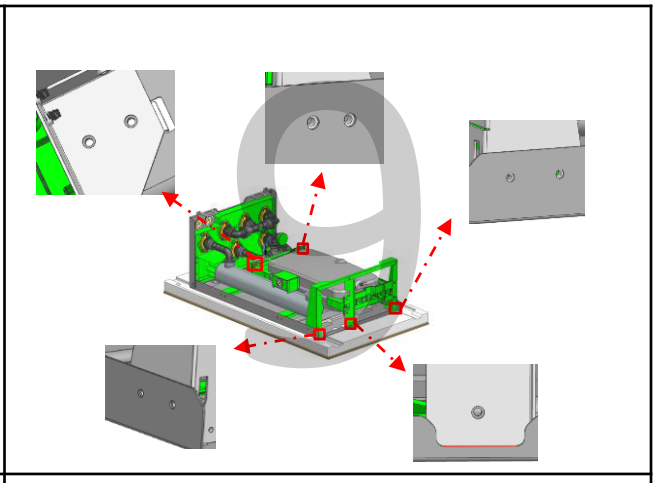

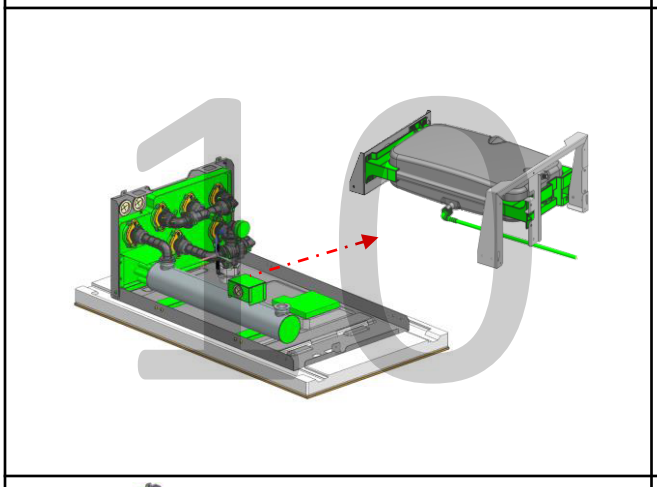

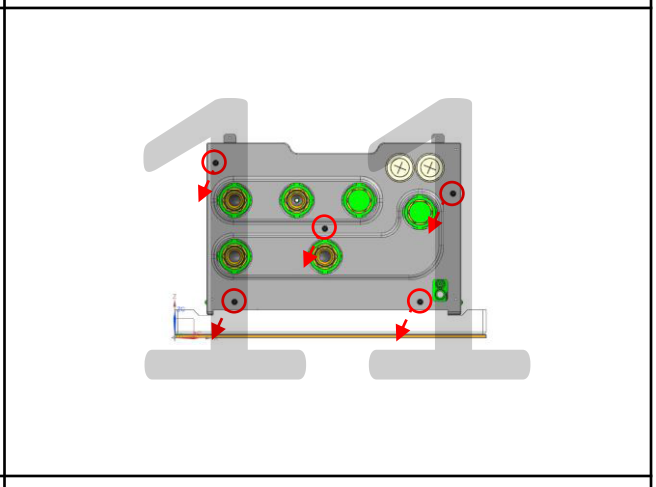

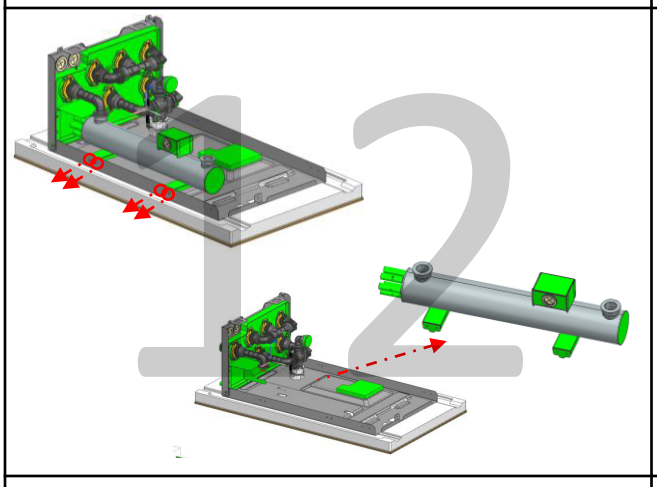

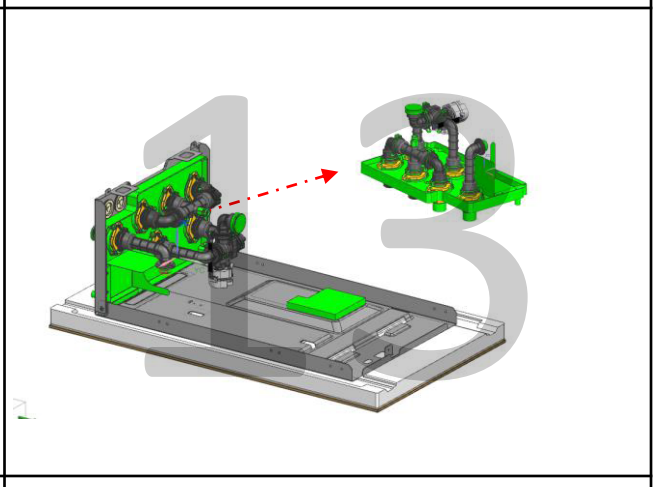

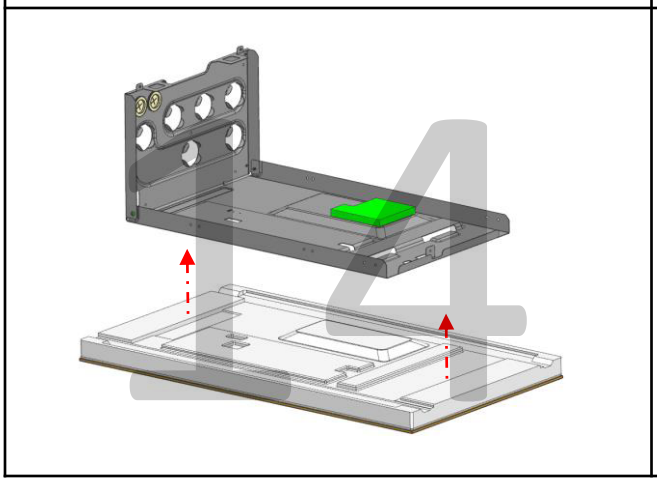

- Commission regulation 327/2011 EU
- **Reference standard ISO 12759:2010**

1. Product model information

Requirements	Information
Overall efficiency (η)	45.7
Measurement category	A
Efficiency category	Static
Efficiency grade at optimum efficiency point	40
VSD (variable speed drives)	Yes
Year of manufacture	2023
Manufacturer's name or Trade Mark	LG Electronics Inc.
Commercial registration number	107-86-14075
Place of manufacturer	South Korea
Product's model number	HM161HF UB60, HM141HF UB60, HM121HF UB60 HM163HF UB60, HM143HF UB60, HM123HF UB60, HM093HFX UB60
Rated power input(s) (kW)	0.17
Flow rate (m^3/s)	1.732
Pressure (Pa)	40
Rotations per minute	550
The specific ratio	3.0

2. Disassembly, recycling or disposal at end-of-life
This product shall be disposed of separately from household-waste based on each local laws. When this product reaches its end of life, dispose of it at your local waste collection or recycling center.

3. Installing, using and maintaining the fan
Periodic maintenance and checks by a skilled & trained personnel are required to ensure that the product is maintained in good condition. In details, see the end product installation and owner's manual included in the end-product.