51.2V Energy Storage $LiFePO_4$ Battery

Features

- LCD monitor the energy storage power data and operating status.
- High-quality $LiFePO_4$ battery, safety, deep cycle and long lifespan.
- Product round edge be more safe, avoid accident collision.
- External main switch to reduce product power consumption and improve safety.
- Wall brackets, which can meet the installation and use of different place.
- BMS bulit inside, over-voltage, over-load, over-temperature protection, etc.
- Compatible, can be connected to different types of loads within the voltage range.
- Support up to 15 modules in parallel.

Structural parts description

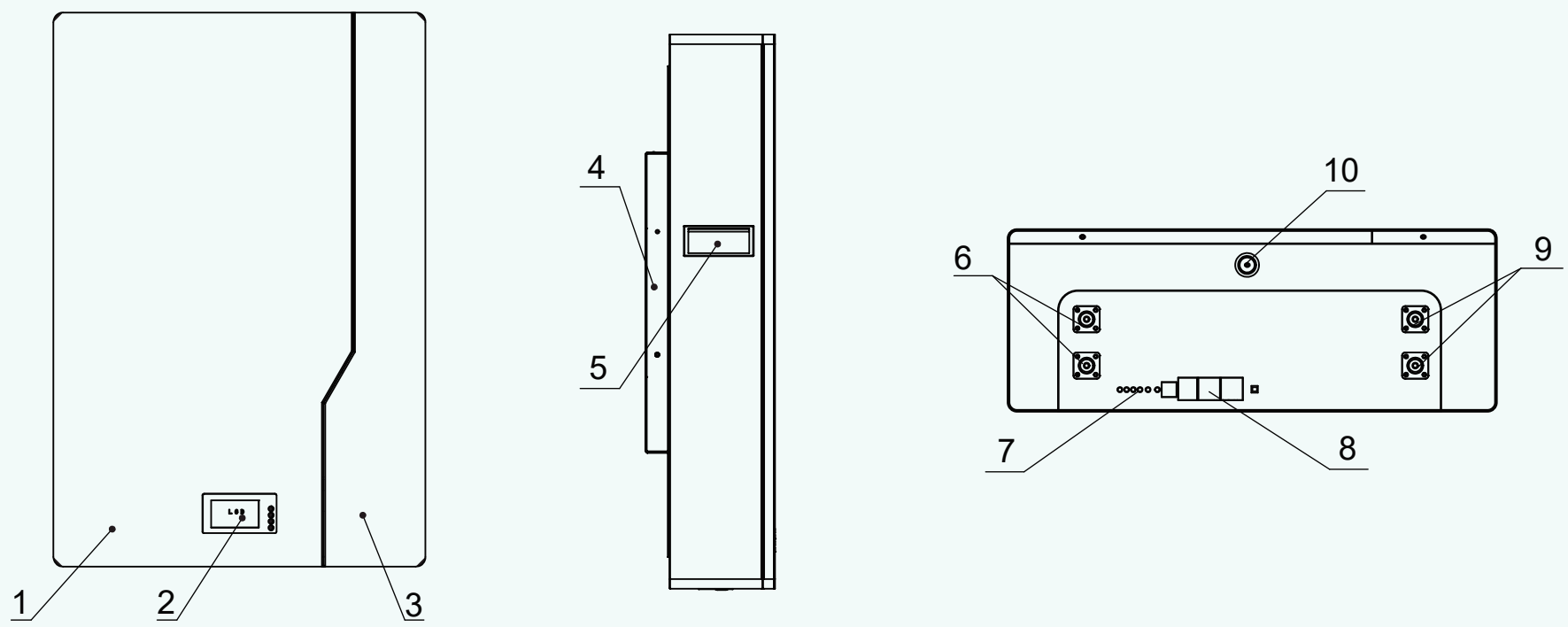

1	White plate	6	M6 Positive terminal (2pcs)
2	LCD display	7	Battery indicator
3	Black plate	8	RS485 /CAN
4	Wall mounted bracket	9	M6 Negative terminal (2pcs)
5	Handle	10	OFF/ON

51.2V Energy Storage $LiFePO_4$ Battery

Parameters

	Model	M16S100BL-V	M16S200BL-V
Basic Characteristics	Nominal Voltage	51.2V	51.2V
	Nominal Capacity	100Ah	200Ah
	Effciency	⩾96%	⩾96%
	Inner Resistance	10mΩ	7mΩ
	Cell Type	$LiFePO_4$	$LiFePO_4$
Charging Characteristics	Charge Voltage	58.4V	58.4V
	Standard Charging Current	20A	40A
	Max.Continuous Charging Current	100A	100A
Discharge Characteristics	Standard Discharge Current	20A	40A
	Continuous Discharge Current	100A	100A
	Peak Discharge Current	200A(3S)	200A(3S)
	Discharge Cut-off Voltage	42V	42V
Environmental Requirements	Charge Temperature Range	0~60°C	0~60°C
	Discharge Temperature Range	-10°C~65°C	-10°C~65°C
	Storage Temperature Range	-5~40°C	-5~40°C
	Storaqe Humidity	65±20%HR	65±20%HR
Mechanical Characteristics	Size(LxWxH)	440×170×560mm	440×206×670mm
	Package Size (L×W×H)	635×512×252mm	750×520×385mm
	Shell Material	SPCC	SPCC
	Net Weight	41kg	90kg
	Gross Weight	43kg	105kg
	Package Method	1pcs per paper carton	1pcs per wooden carton
Others Characteristics	Cycle Life	⩾6000 times	⩾6000 times
	Self Discharge	2% per month	2% per month
	SOC Indication	LED Light& LCD Screen	LED Light& LCD Screen
	Communication Protocol	RS485/CAN	RS485/CAN
	Matching Inverter	Growatt, Goodwe, Deye, Luxpower, Sofar etc	
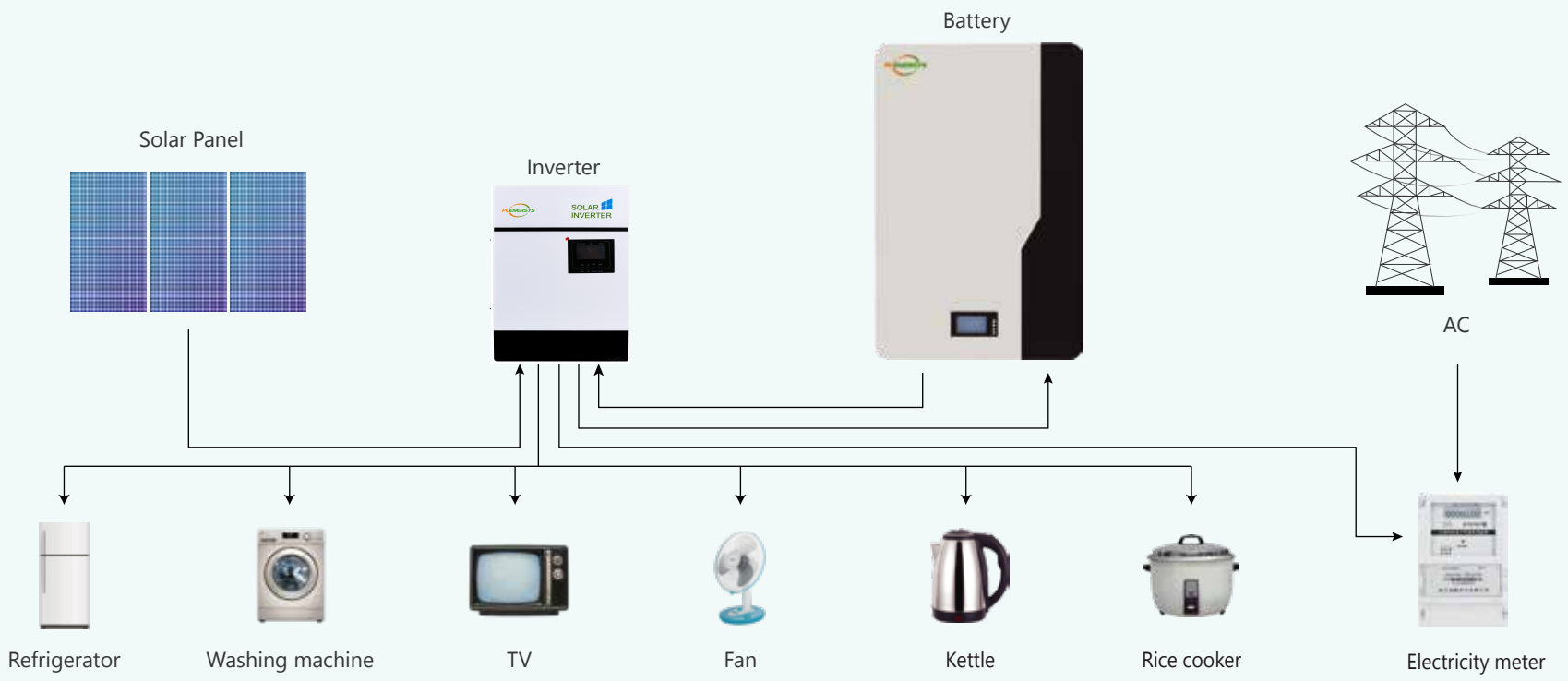
Product application diagram