User Manual

Rechargeable Li-ion Battery System

SE-F12 Max

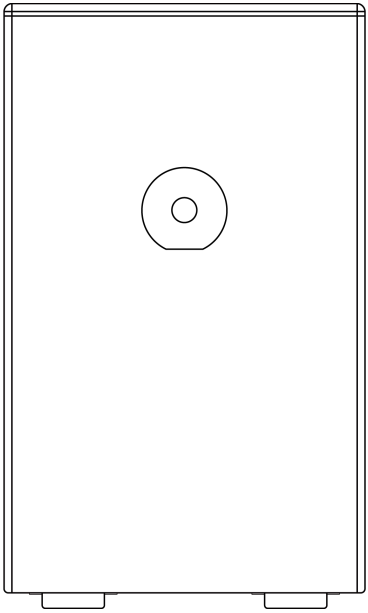

Issue：02
Date：20260309

How to Use This Manual

Read the manual and other related documents before performing any operation on the battery. Documents must be stored carefully and be always available. Contents may be periodically updated or revised due to product development. The information in this manual is subject to change without notice.

The latest manual can be acquired via www.deyeess.com (service-ess@deye.com.cn).

All Rights Reserved

No part of this document can be reproduced in any form or by any means without the formal permission of the manufacturer.

Trademarks and Permissions

Trademarks used in this manual are owned by the manufacturer. All other trademarks or registered trademarks mentioned in this manual are owned by their respective owners.

Software Licenses

* It is prohibited to use data contained in firmware or software developed by the manufacturer , in part or in full, for commercial purposes by any means.
* It is prohibited to perform reverse engineering, cracking, or any other operations that compromise the original program design of the software developed by the manufacturer.

Disclaimer

The manufacturer shall not be liable for personal injury, property loss, product damage and subsequent losses under the following circumstances:

* Damages caused by force majeure, including earthquake, flood, volcanic eruption, mudslide, lightning, fire, war, military conflict, typhoon, hurricane, and so on.
* Failure to comply with the provisions of this manual.
* Installation, operation or storage environment fails to meet international, national or regional standards.
* Incorrect use of this product.
* Unauthorized/unqualified personnel repair, disassemble or operate the product/rack.
* Use of unapproved spare parts.
* Unauthorized modifications or technical changes to the product or software.
* Incorrect shipment by yourself or the third party commissioned by you.
* Unsatisfactory materials and tools from you own that do not meet the relevant international, national or regional standards.
* Damage caused by yourself or the third party's negligence, intent, gross negligence, or improper operation.

CONTENTS

1 Safety Instructions 3
1.1 Terms and Symbols 3
1.2 Safety Rules 4
2 Product Description 6
2.1 Product Features 6
2.2 Application Scenarios 6
2.3 Product Overview 7
3 Preparation for Installation 9
3.1 Unpacking List 9
3.2 Required Tools 10
3.3 Safety Gear 10
4 Installation Instructions 11
4.1 Installation Torque 11
4.2 Installation Personnel 11
4.3 Installation Environment 12
4.4 Selection of Installation Sites 14
4.5 Mounting the Wheels (Optional) 14
4.6 Installing the Battery 16
4.6.1 Floor-mounted Installation 16
4.6.2 Wall-mounted Installation 18
5 Electrical Connection 20
5.1 System Connection Precautions 20
5.2 Preparation before Wiring 20
5.3 System Connection 21
5.4 Grounding 23
6 Use 24
6.1 Power on/off 24
6.2 Error 24
6.3 How to utilize your APP? 25
7 Inspection, Cleaning and Maintenance 27
7.1 General Information 27

7.2 Inspection 27
7.3 Cleaning 28
7.4 Maintenance 28
8 Storage 29
9 Troubleshooting 30
10 Technical Specifications 31
11 Environmental Disposal 33
12 Transportation Requirements 34
13 EU Declaration of Conformity 35

1 Safety Instructions

Warning!

Read and follow carefully all safety warnings and all instructions . Failure to do so may result in electrical shock, fire, serious injury, or death. Save these instructions for future reference.

1.1 Terms and Symbols

Terms /Symbols	Description
Danger	Indicates a hazard with a high level of risk which, if not avoided, will result in death or serious injury
Warning	Indicates a hazard with a medium level of risk which, if not avoided, will result in death or serious injury.
Caution	Indicates a hazard with a low level of risk which, if not avoided, will result in minor or moderate injury.
Notice	Indicates a potentially hazardous situation which, if not avoided, could results in equipment damage, data loss, performance deterioration, or unanticipated results. NOTICE is used to address practices not related to personal injury.
Note	Supplements the important information in the main text. NOTE is used to address information not related to personal injury, equipment damage, and environment deterioration.
	Caution , risk of electric shock symbol indicates important safety instructions, which if not correctly followed , could result in electric shock.
	The DC input terminals of the inverter must not be grounded.
	Surface high temperature. Please do not touch the inverter case.
CE	CE mark of conformity.

	Please read the instructions carefully before use.
	Indicate that this product is recyclable
	Do not place near open fire or incinerate. Do not use near heaters or hot temperature source.
	Attention! The risk of explosion.
	Li-ion battery
	Do not tread
	Do not run and chase
	Do not touch with your palm
	Symbol for the marking of electrical and electronics devices according to Directive 2002/96/ EC. Indicates that the device , accessories and the packaging must not be disposed as unsorted municipal waste and must be collected separately at the end of the usage. Please follow Local Ordinances or Regulations for disposal or contact an authorized representative of the manufacturer for information concerning the decommissioning of equipment.

1.2 Safety Rules

1) After unpacking, please check product and packing list first, if product is damaged or lack of parts, please contact with the local retailer.
2) Before installation, be sure to cut off the grid power and make sure the battery is in the turned-off mode.
3) Wiring must be correct. Be careful to negative pole and positive of cable and terminals. Make sure no short circuit with the external device.

4) It is prohibited to connect the battery and AC power directly.

5) Please ensured the electrical parameters of battery system are compatible to related equipment.

6) Do not allow the terminals to contact exposed wire or metal.

7) Keep out of reach of children or animals.

8) Do not place batteries near fire, heater or high temperature sources. This will reduce the risk of explosion or possible injury.

9) Batteries can explode in the presence of a source of ignition, such as open flame. An exploded battery can propel debris and chemicals. If occurs, flush with water immediately.

10) Do not submerge the battery in water or expose it to moisture when the product is in an incomplete state; the Ingress Protection Rating of this product is **IP65** and this product is waterproof when in a complete state. Do not disassemble or alter the battery in any way.

11) If the battery system needs to be moved or repaired, the power must be cut off and the battery is completely shut down.

12) It is prohibited to connect the battery with different type of Battery.

13) It is prohibited to put the batteries into use with faulty or incompatible hybrid inverter.

14) It is prohibited to disassemble the battery.

15) In case of fire, only dry fire extinguishers can be used. Liquid fire extinguishers are forbidden.

16) Please do not open, repair, or disassemble the battery except qualified personnel. We do not undertake any consequences or related responsibility which be- cause of violation of safety operation or violating of design, production, and equipment safety standards.

17) BATTERY NEEDS TO BE RECHARGED WITHIN 48 HOURS AFTER FULLY DISCHARGED. IT IS RECOMMENDED TO KEEP THE SOC ABOVE 5% DURING USE TO AVOID OVER-DISCHARGE.

18) Do not expose cable outside.

19) Do not expose battery to flammable or harsh chemicals or vapors.

20) Do not paint any part of Battery, include any internal or external components.

21) Do not connect battery with PV solar wiring directly.

22) Any foreign object is prohibited to insert into any part of battery.

23) Do not strike, drop, puncture or step on the battery. A damaged battery is subjected to explosion. Properly dispose of damaged battery immediately.

24) In case of electrolyte leakage, keep leaked electrolyte away from contact with eye or skin, If that occurs, wash immediately with clean water for at least 10 minutes, then seek immediate medical attention.

2 Product Description

2.1 Product Features

1. Safer & Reliable

Adopts Lithium Iron Phosphate (LFP) Battery, featuring safety and long lifespan.

Equipped with a built-in intelligent BMS with an active fuse, providing complete protection.

Comes with intelligent thermal management, rated IP65/NEMA 3R, and applicable in a wide temperature range: -20℃ to 55℃ (-4℉ to 131℉).

2. Convenient & Smart

Battery modules support auto networking (no DIP switches required), ensuring easy operation.

Supports Deye Cloud remote monitoring and upgrade via Deye Inverter.

Compatible with local Bluetooth APP for monitoring and upgrade.

3. Flexible

Features modular design for easy expansion, with a maximum of 32 units in parallel.

Suitable for residential and small commercial applications to increase the self-consumption ratio.

4. Ultra-efficient

Supports max. 1C charge & 1C discharge, with a max. 11.8kW output power.

Integrated PACK design reduces line loss and increases energy density.

5. Wall-Mounted & Floor-Mounted

Boasts a flat design, supporting both wall-mounted and floor-mounted installation to save installation space.

2.2 Application Scenarios

The following illustration shows basic application of this battery. It also includes following devices to have a complete running system:

- Generator or Utility;
- PV modules;
- Low voltage Hybrid Inverter (Charge & Discharge).

Consult with your system integrator for other possible system architectures depending on your requirements.

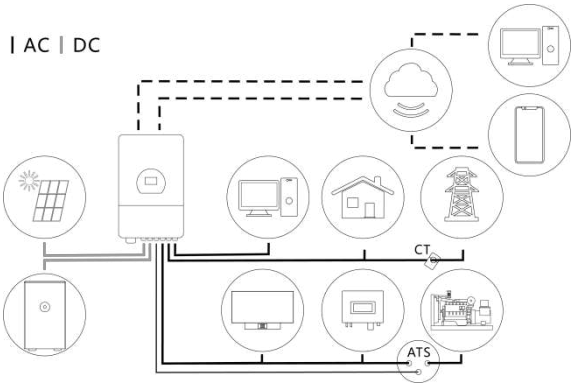

The picture is only a reference picture, please refer to the actual product, the final interpretation right belongs to DEYE.

2.3 Product Overview

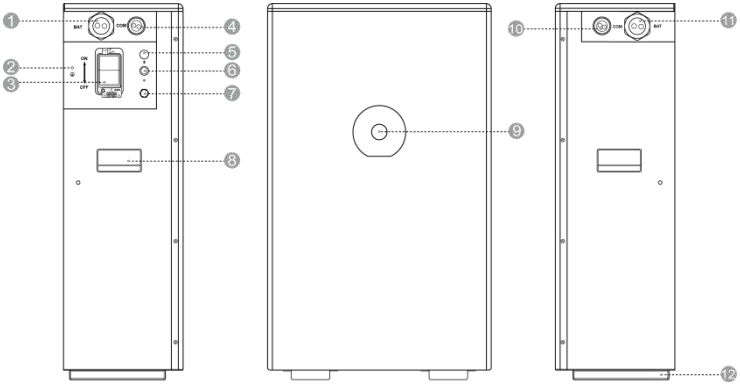

①,⑪	P+/P- Port	⑥	Battery Button Switch
②	Protective Grounding	⑦	Air Vent Valve
③	Circuit Breaker(in the Protective Cover)	⑧	Handle
④,⑩	Communication Port	⑨	Display Screen
⑤	Bluetooth	⑫	Base Foot

P+/P- Port (①, ⑪)

Main power output/input positive and negative ports of the battery pack, used to connect loads or charging equipment.

Protective Grounding (②)

Safety grounding terminal, ensuring reliable grounding of the metal enclosure to prevent electric shock risks.

Circuit Breaker (③)

Built-in overcurrent protection device. It automatically cuts off the circuit when the current abnormally exceeds the safe value, protecting the battery and equipment. A protective cover is fitted externally over the circuit breaker to shield it from external impacts and contamination.

Communication Port (④, ⑩)

Connection interfaces for data communication, enabling battery status monitoring, parameter configuration, and data exchange with external systems (e.g., energy management systems).

Bluetooth (⑤)

Integrated wireless communication module, supporting pairing with smartphone applications via Bluetooth.

Battery Button Switch (⑥)

Physical power switch for manually turning the battery pack output on or off.

Air Vent Valve (⑦)

Balances internal and external pressure of the device while preventing the ingress of contaminants such as water, dust, and oil.

Display Screen (⑨)

Information display window, it shows the “Status of Charge”, “Error Code”, and “Deye logo with Backlight”

Base Foot (⑫)

Support structure at the bottom of the battery pack, providing stable placement and heat dissipation space.

3 Preparation for Installation

After unpacking, check that packing contents are intact and complete, and free from any damage. If any item listed in the Unpacking List is missing or damaged, contact your vendor.

3.1 Unpacking List

Battery pack*1pc		User manual*1pc		Positioning paperboard*1pc

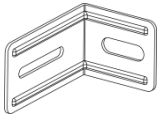		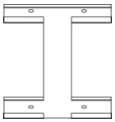		
Hanging lug*2pcs		Hanging plate*1pc		Hook*2pcs

Positive power cable*1pc		Negative power cable*1pc		Communication cable *1pc

				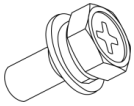
Ground wire*1pc		Expansion bolt*6pcs (M6*100)		Bolt*12pcs (M6*14)

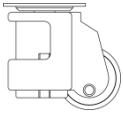				
Wheel*4pcs (Optional)				

3.2 Required Tools

These tools are required to install the battery.

Hammer		Drill		Tape measure

Hexagon socket wrench		Phillips screwdriver		Marker

Note:

Use properly insulated tools to prevent accident tale electric shock or short circuits. If insulated tools are not available, cover the entire exposed metal surfaces of the available tools, except their tips, with electrical tape.

3.3 Safety Gear

It is recommended to wear the following safety gear when dealing with the battery pack.

Insulated gloves		Safety shoes		Safety goggles

4 Installation Instructions

4.1 Installation Torque

Applicable for: Battery pack cabinet assembly / Sheet metal fixing / Bracket connection.

Note: ① Strictly follow the recommended torque, avoid over-tightening/under-tightening ② Unit: N·m (Newton meters)

Bolt Specification	Recommended Torque	Unit
M3	0.7 ~ 0.9	N·m
M4	1.6 ~ 2.2	N·m
M5	3.2 ~ 4.4	N·m
M6	5.3 ~ 7.4	N·m
M8	12 ~ 19	N·m
M10	25 ~ 38	N·m
M12	44 ~ 65	N·m
M14	54 ~ 108	N·m
M16	110 ~ 165	N·m
M18	150 ~ 240	N·m
M20	216 ~ 335	N·m

Supplementary Instructions

① The torque value is for reference only for standard bolts during normal assembly; adjust appropriately for special working conditions (high vibration/harsh environment).

② Use a calibrated torque wrench for installation to ensure torque accuracy.

4.2 Installation Personnel

- Only qualified professionals or trained personnel are allowed to install the equipment.

  -Professionals:personnel who are familiar with the working principles and structure of the equipment, trained or experienced in equipment operations and are clear of the sources and

degree of various potential hazards in equipment installation.

-Trained personnel:personnel who are trained in technology and safety have required experience,are aware of possible hazards on themselves in certain operations and are able to take protective measures to minimize the hazards on themselves and other people.

- Personnel who plan to install the equipment must receive all necessary safety precautions and local relevant standards.
- Only qualified professionals are allowed to remove safety facilities and inspect the equipment.
- Knowledge of electronic, electrical wiring and mechanical expertise, and be familiar with electrical and mechanical schematics.
- Understanding and complying with this document and other applicable documents.

4.3 Installation Environment

Danger!

Do not expose the equipment to flammable or explosive gas or smoke. Do not perform any operation on the equipment in such environments.

Danger!

Do not store any flammable or explosive materials in equipment area. Do not cover or wrap the battery.

Danger!

Do not place the equipment near heat sources or fire sources, such as smoke, candles, heaters, or other heating devices. Overheat may damage the equipment or cause a fire.

Warning!

Install the equipment in an area far away liquids. Do not install it under areas prone to condensation, such as under water pipe and air exhaust vent, or area prone to water leakage, such as air conditioner vents, ventilation vents, or feeder windows of the equipment room. Ensure that no liquid enters the equipment to prevent faults or short circuits.

Warning!

To prevent damage or fire due to high temperature, ensure that the ventilation vents or heat dissipation systems are not obstructed or covered by other objects while the equipment is running.

- The installation and usage environment must meet relevant international,the local laws and regulations.The user is obliged to protect the equipment against fire or other hazards.
- Keep the equipment out of the reach of children and away from daily working or living area, including but not limited to the following areas:studio, bedroom, lounge, living room, music room, kitchen,game room, room theater, sunroom,toilet,bathroom,laundry,and attic.
- Do not install the equipment in places that are enclosed, poorly-ventilated without proper fire fighting facilities, or difficult for firefighters to access.
- Do not install the equipment in an easily accessible position because the temperature of the enclosure and heat sink is high when the equipment is running.
- Do not install the equipment on a moving object, such as ship, train, or car.
- Ensure that the equipment is installed in a clean, dry and well ventilated area with proper temperature, humidity and altitude range.Check for more data in the “Technical Specifications” section.
- Do not install the equipment in an environment with magnetic dust, volatile or corrosive gases, infrared and other radiations, organic solvents, conductive metal,or salty air.
- Do not install the equipment in an area conducive to growth of microorganism such as fungus or mildew.
- Do not install the equipment in an area with strong vibration, noise, or electromagnetic interference.
- Do not install the equipment in an position that may be submerged in water.
- Keep away from the air outlet of hybrid inverter to prevent personal injury..
- The floor and wall at the installation location shall be fully waterproof with a flat and level surface.
- Before installing and powering up the system, dust and iron filings must be removed to keep the environment clean. The system cannot be installed in desert areas without a shell to protect against sand.
- This product may be installed indoors and outdoors. To prolong the battery's lifespan, please try to avoid direct sunlight exposure, direct rainwater impact, snow cover, and being close to fire sources, etc.

Caution!

Moving heavy objects.

Be careful to prevent injury when moving heavy objects. Select an suitable way to moving heavy objects according to product weight.

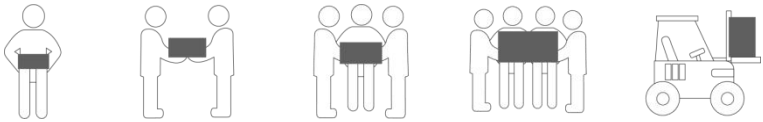

Weight	Method	Recommendation
<18 kg (40 lbs)	Manual handling	1 person
18~32 kg (40~70 lbs)	Manual handling	2 persons
32~55 kg (70~121 lbs)	Manual handling	3 persons
55~68 kg (121~150 lbs)	Manual handling	4 persons
> 68 kg (150lbs)	Moving device	Forklift

4.4 Selection of Installation Sites

Caution!

Batteries should be installed in a clean flat place with no direct sunlight, away from water and fire sources, and at a suitable temperature. The installation location is recommended to meet the size requirements of the figure below: (0≤N≤29)

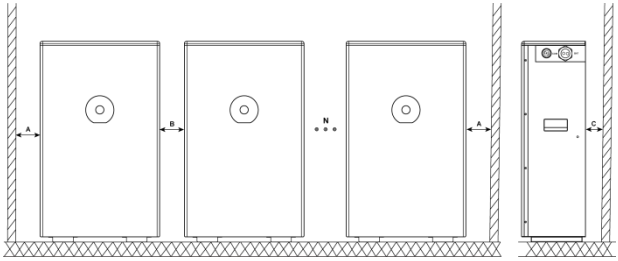

Item	Distance (mm)
A	200
B	150
C	20-25

4.5 Mounting the Wheels (Optional)

The base feet are pre-installed components on the equipment before delivery. When installing the

wheels, first remove the feet and the 8 accompanying M6*14 fixing screws; during wheel installation, directly use the 8 removed screws for assembly.

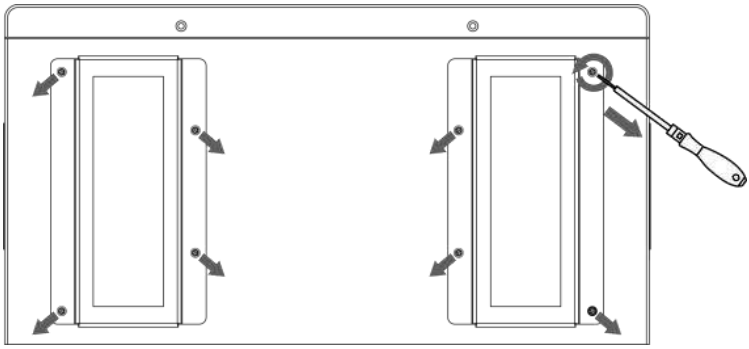

When tightening the screws, install 2 M6*14 screws for each wheel in a diagonal pattern according to the positions shown in the diagram. Recommended torque: 5.3 ~ 7.4 N.m

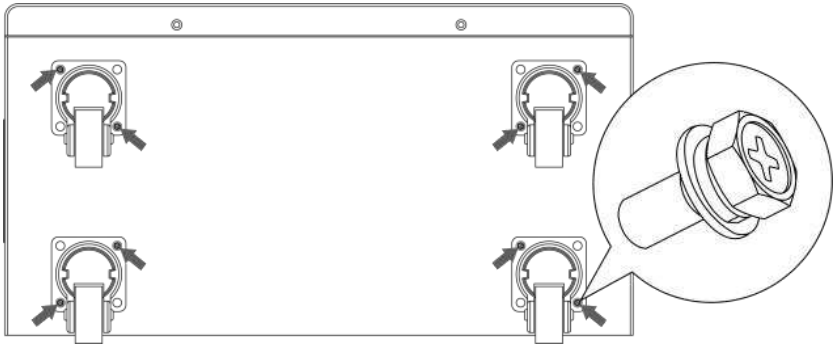

NOTE: Push your device with wheels in accordance with the picture below.

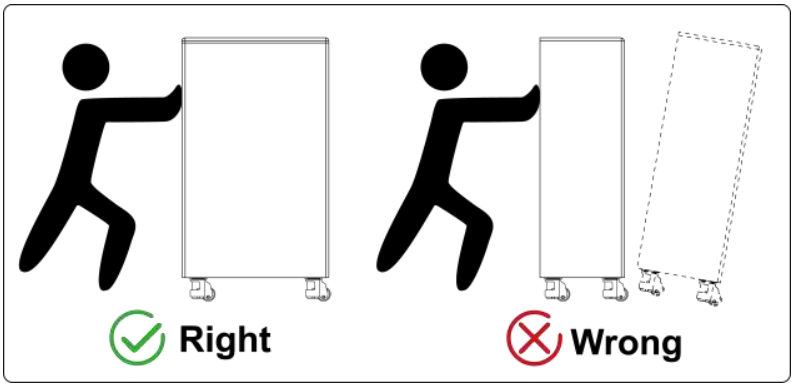

4.6 Installing the Battery

Caution!

- The battery pack is heavy. Be sure to use appropriate equipment (e.g., forklift) for handling and hanging, and ensure multi-person collaborative operation to prevent tipping or falling.
- All screws and expansion bolts must be tightened to ensure firm connection.
- When drilling holes, pay attention to prevent dust from entering the battery, which may affect the battery performance and function. Installer shall avoid the wires and pipes behind the wall when they drill the hole on the wall.
- After drilling, never forget to clean up the floor.

4.6.1 Floor-mounted Installation

Step 1: Lean the battery pack against the installation position, with a distance of 20-25 mm from the wall.

Step 2: Install the hanging lugs to the mounting holes on both sides of the battery pack with M6 screws, and **do not fully tighten them temporarily.**

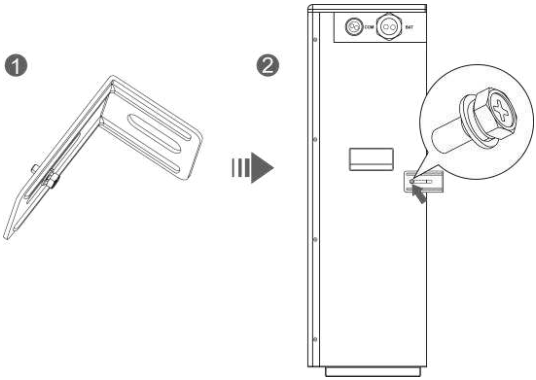

Step 3: Attach the short side of the L-shaped hanging lug to the wall, align it with the hole position and mark on the wall.

Step 4: Drill holes at the marked positions with a diameter of 10 mm and depth of 100~110mm, then align the hanging lugs and drive in the expansion bolts.

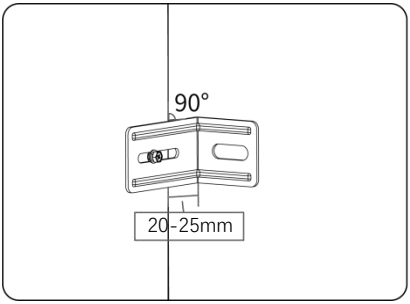

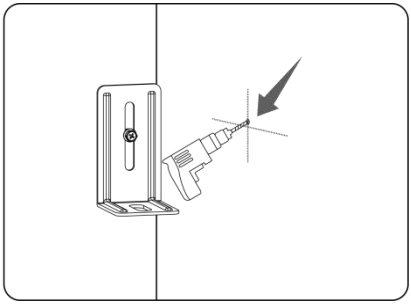

Step 5: Tighten the M6*100 expansion bolts that fix the hanging lugs to the wall, then tighten the M6*14 connecting screws that fix the hanging lugs to the battery pack. Recommended torque: 5.3 ~ 7.4 N.m

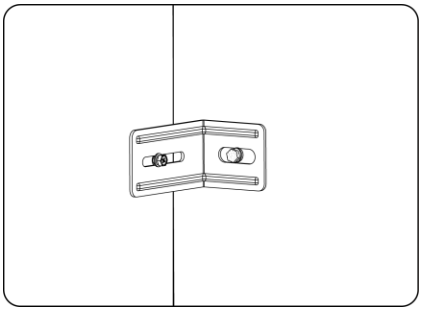

Step 6: Repeat the above steps on the other side.

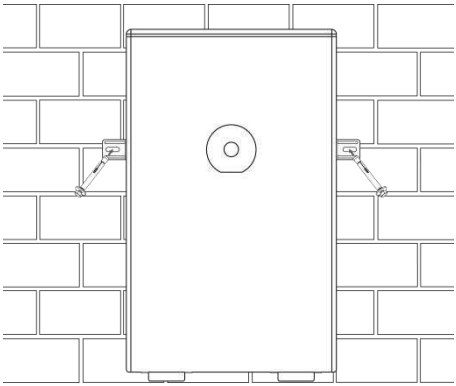

4.6.2 Wall-mounted Installation

Caution!

Please mount the battery pack on the solid wall!

Step 1: Use the positioning paperboard to mark 4 mounting hole positions on the wall.

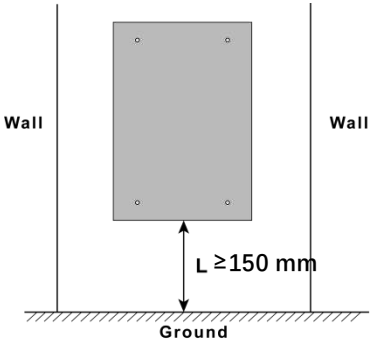

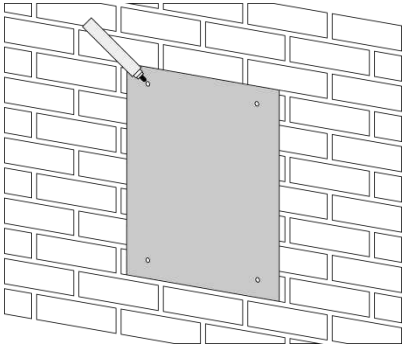

Step 2: Drill holes at the marked positions with a diameter of 10 mm and depth of 100~110mm.

Step 3:

a. Align the hanging plate with the wall holes, drive one expansion bolt in first and tighten it slightly.

b. Insert the remaining three expansion bolts and align them with the wall holes.

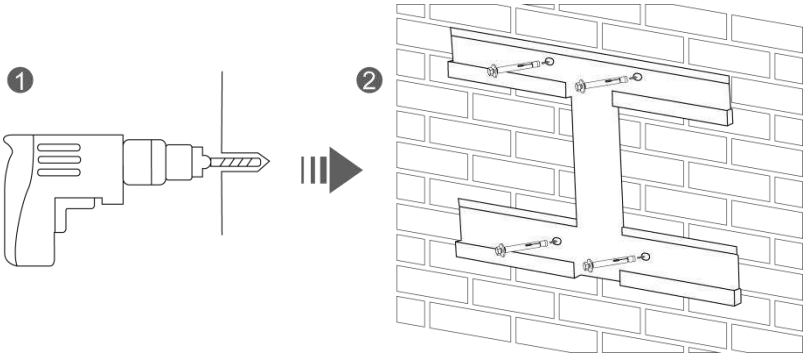

c. Fully tighten all M6*100 expansion bolts to secure the hanging plate firmly. Recommended torque: 5.3 ~ 7.4 N.m

Step 4: Use the 10 M6*14 screws included in the package to install the hooks at the designated positions on the back of the battery pack. Recommended torque: 5.3 ~ 7.4 N.m

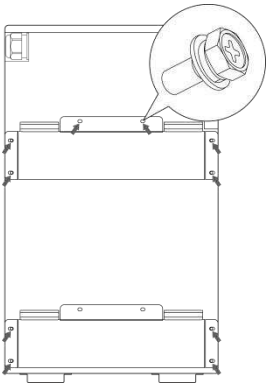

Step 5: Align the hooks of the battery pack with the mounting plate and hang it on.

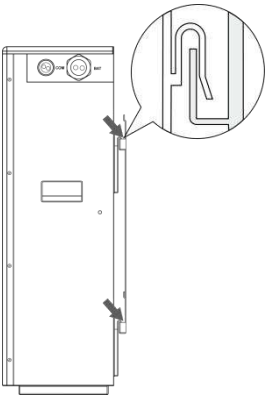

Step 6: Secure both the left and right sides with L-shaped hanging lugs. For detailed operating steps, refer to Steps 2 to 6 in Section "***4.6.1 Floor-mounted Installation***".

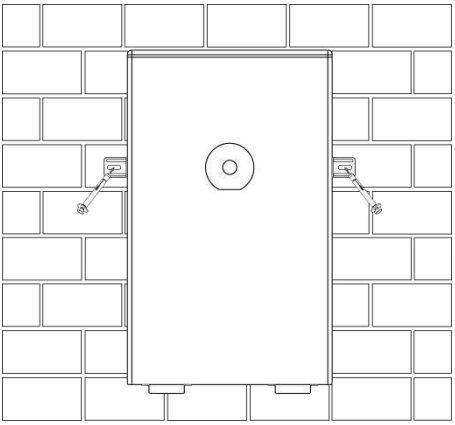

5 Electrical Connection

5.1 System Connection Precautions

Note:

- This battery must be used in conjunction with compatible hybrid inverter models. It needs to establish communication with the inverter to activate the lithium battery mode, ensuring optimal battery performance.If used with an unmatched inverter, ensure that the maximum operating current does not exceed 120A for charging and 180A for discharging at an ambient temperature of 25±2°C.
- When connecting to inverters or being in parallel mode, please use cables provided in the unpacking list. If other cables must be used in special cases, ensure they meet relevant standards.

5.2 Preparation before Wiring

Step1: Cover Removal and Verification

Open the top cover of the battery pack, check the labels of each interface in the wiring area to ensure correct connection.

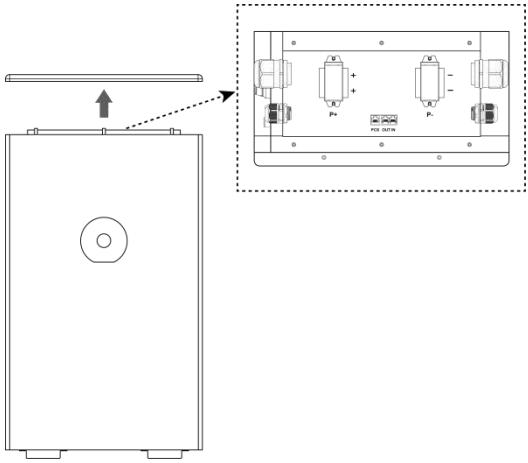

Step 2: Cable Routing

Pass the cables through the cable inlets on either the left side, the right side, or both sides of the battery pack, then route them to the central wiring area on the top.

Communication Cable:

The PCS port is connected to the inverter via a communication cable.

If the battery acts as the master: The OUT port is connected to the IN port of the next battery pack via a communication cable.

If the battery does not act as the master: The IN port is connected to the OUT port of the previous battery pack via a communication cable; The OUT port is connected to the IN port of the next battery pack via a communication cable, or the OUT port is left unconnected.

Power Cable:

Remove the plastic covers from the positive and negative terminal blocks, unscrew the factory-installed M8*20 bolts at the wiring positions, connect the corresponding positive and negative cables, then re-tighten the M8*20 bolts with a recommended torque of 12 ~ 19 N·m.

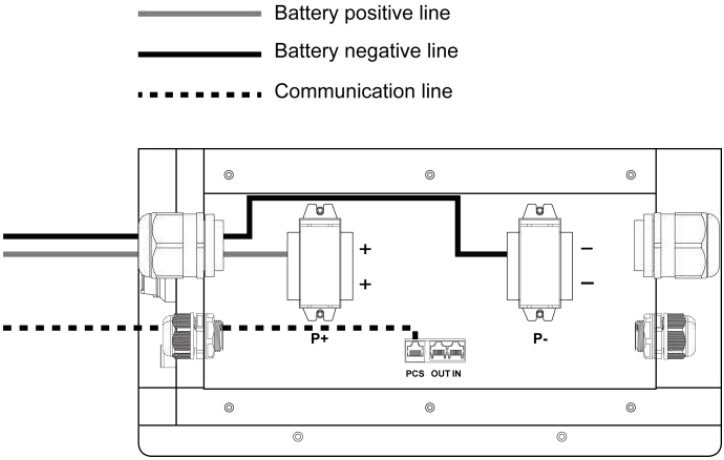

5.3 System Connection

The battery supports parallel connection. Select one of the following connection methods as required:

Warning!

- The maximum continuous current of a single battery system is 230A. Do not exceed this current

limit, otherwise the connectors and cables may overheat, leading to a fire hazard.

- The cross-sectional area of the cable used shall be not less than 1 AWG or 50 mm².

Mode 1: One-to-One Connection

Connect a single inverter to a single battery pack.

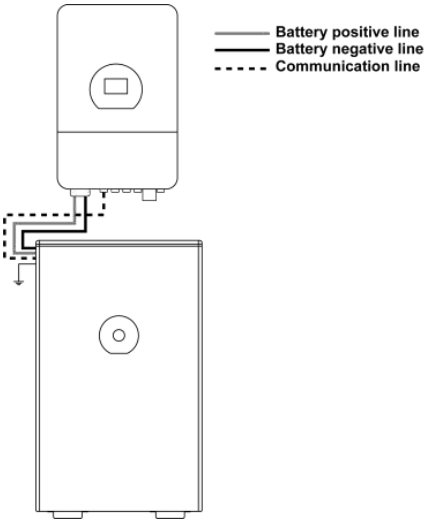

Mode 2: Parallel Connection

Connect a single inverter to multiple battery packs;

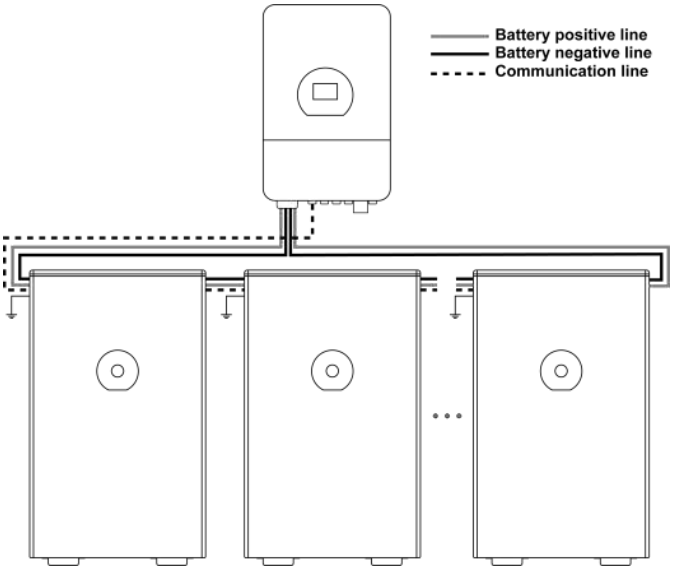

Or connect multiple inverters to multiple battery packs.

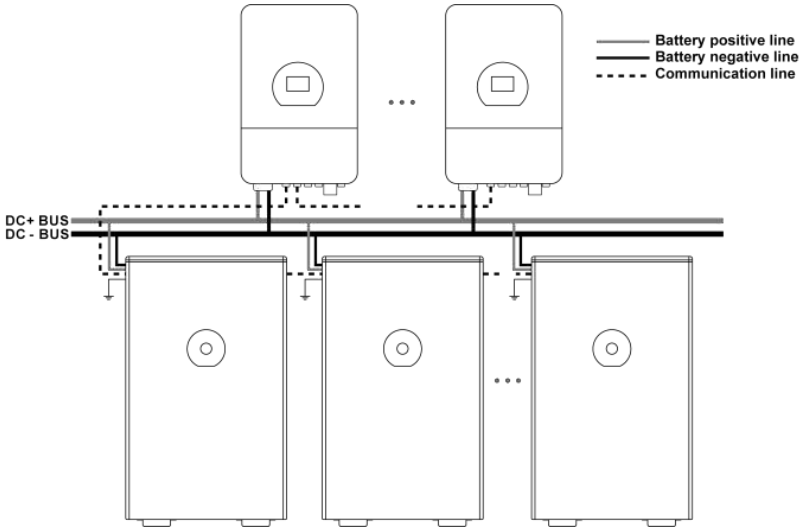

Note: For multi-to-multi connection, prepare the bus cable of corresponding specifications by yourself.

5.4 Grounding

The grounding bolt (M4*8) is pre-installed on the battery at the factory. Follow these steps:

- Unscrew the grounding bolt
- Connect the grounding wire
- Re-tighten the bolt to the battery with a recommended torque of 1.6 ~ 2.2 N·m
- Ensure a reliable connection at the designated grounding terminal and complete grounding

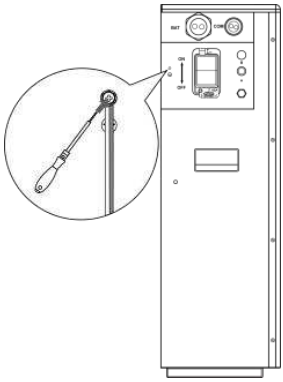

6 Use

6.1 Power on/off

Before operating the product, ensure that:

- All cables are wired correctly and firmly.
- All fasteners including bolts and screws are tightened firmly.
- No bystanders or animals enter into the working area.
- Keep foreign objects , especially metal, away from the battery.

1. **Press the battery switch to to turn on the equipment.**
2. **After you finish your work, press the battery switch to stop the equipment.**

6.2 Error

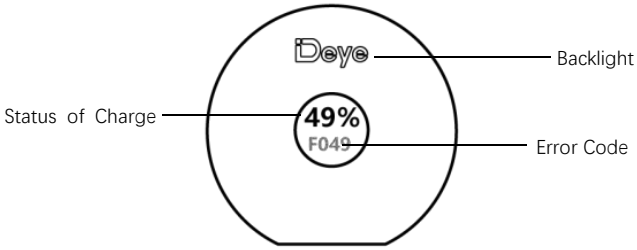

The status of the battery pack in use will be displayed on the LCD screen. For details, please refer to the two tables below.

Condition	Performance
Normal	After initialized successfully, the LCD screen will be on for long time and shows the SOC in percentage. The screen stays on unless shutdown and dormancy. The backlight in the shape of Deye appears blue.
Abnormal	If the fault in the next table occurs, the corresponding fault code will be displayed on the

	LCD screen. For details, refer to the next table.The backlight in the shape of Deye appears red.
Upgrade	When upgrading, the screen will be filled with the “upd” as well as the upgrade process in percentage. The backlight in the shape of Deye appears blue.
Others	1. The Deye backlight displays red and flash quickly when there is a communication failure between the LCD screen and the BMS motherboard. 2. The Deye backlight displays red while the system is upgrading with faults existing.

Error Code	Connotation	Error Code	Connotation
01	Cell over voltage	28	Mosfet short circuit
02	Cell under voltage	29	EEPROM error
04	Ultimate_Protection	30	Internal communication fails
05	Charge over current	31	PCS communication fails
06	Discharge over current	32	Master address repeat
07	Cell over temperature	45	Cur Limit Mos Adhesion
08	Cell under temperature	46	Mos Adhesion Susp
11	Cell voltage over difference	47	Heat Mos adhesion
12	Cell temperature over difference	48	Heat error
13	Mos over temperature	49	Over connect temp
14	Heating film over temperature	50	Pre charge fail
19	AFE-OCDL/OCD1/OCD2	51	Charge inverses
24	AFE-SCDL/SCD	52	Over terminal temp
25	AFE communication fails	53	Fuse blown
26	Cell voltage sampling fails	54	VOLT_OPEN_WIRE_FAIL
27	Temperature sampling fails	55	TEMP_OPEN_WIRE_FAIL

6.3 How to utilize your APP?

As you device is designed to possess Bluetooth function, it can connect to the Deye Cloud App via Bluetooth. Following successful login and registration, users can retrieve information about battery packs or the entire system. For detailed instructions on the Deye Cloud App, refer to the operation manual by scanning the provided QR code.

7 Inspection, Cleaning and Maintenance

7.1 General Information

- The battery product is not fully charged. It is recommended that the installation be completed within 3 months after arrival;
- During the maintenance process, do not re-install the battery in the battery product. Otherwise, the performance of the battery will be reduced;
- It is forbidden to dismantle any battery in the battery product, and it is forbidden to dis- sect the battery;
- After the battery product is over-discharged, it is recommended to charge the battery within 48 hours. The battery product can also be charged in parallel. After the battery product is connected in parallel, the charger only needs to connect the output port of any product battery.
- Never attempt to open or dismantle the battery! The inside of the battery does not contain serviceable parts.
- Disconnect the Li-Ion battery from all loads and charging devices before performing cleaning and maintenance activities.
- Place the enclosed protective caps over the terminals before cleaning and maintenance activities to avoid the risk of contacting the terminals.
- All the battery terminals must be disconnected for maintenance.
- Please contact the supplier within 24 hours if there is something abnormal.
- Do not use cleaning solvents to clean battery.

7.2 Inspection

- Inspect for loose and/or damaged wiring and contacts, cracks, deformations, leakage, or damage of any other kind. If damage to the battery is found, it must be replaced. Do not attempt to charge or use a damaged battery. Do not touch the liquid from a ruptured battery.
- Regularly check the battery's state of charge. Lithium Iron Phosphate batteries will slowly self-discharge when not in use or whilst in storage.
- Consider replacing the battery with a new one if you note either of the following conditions:

-The battery run time drops below 70% of the original run time.

-The battery charge time increases significantly.

7.3 Cleaning

If necessary, clean the Li-Ion battery with a soft, dry cloth. Never use liquids, solvents, or abrasives to clean the Li-Ion battery.

7.4 Maintenance

The Li-Ion battery is maintenance-free. Charge the battery to approximately > 80% of its capacity at least once every year to preserve the battery capacity.

8 Storage

- The battery product should be stored in a dry, cool, and cool environment;
- If the battery is stored for long time, it is required to charge them every six months, and the SOC should be no less than 50%.
- Generally, the maximum storage period at room temperature is 6 months. When the battery is stored over 6 months, it is recommended to check the battery voltage. If the volt age is higher than 51.2V, it can continue to store the battery. In addition, it is needed to check the voltage at least once a month until the voltage is lower than 51.2V. When the voltage of the battery is lower than 51.2V, it must to be charged according to the charging strategy.
- When the battery product is stored, the source of ignition or high temperature should be avoided and it should be kept away from explosive and flammable areas.
- If your batteries need to be charged or discharged in lead-acid mode,maintain a charge/discharge current of 0.2C within a temperature range of 5℃ to 45℃.

9 Troubleshooting

To determine the status of the battery system, users must use additional battery status monitoring software to examine the protection mode. Refer to the installation manual about using the monitoring software. Once the user knows the protection mode, refer to the following sections for solutions.

Fault Type	Phenomenons	Possible Causes	Solutions
Information collection fails	The cell voltage sampling circuit is faulty. The cell temperature sampling circuit is faulty	The welding point for cell voltage sampling is loose or disconnected. The voltage sampling terminal is disconnected. The cell temperature sensor has failed.	Replace the collection line.
Electrochemical cell error	The voltage of the cell is low or unbalanced.	Due to large self-discharge, the cell over discharges to below 2.0V after long term storage. The cell is damaged by external factors, and short circuits, pinpricks, or crushing occur.	Replace the battery.
Over-voltage protection fails	The cell voltage is greater than 3.65 V in charging state. The battery voltage is greater than 58.4 V.	The busbar input voltage exceeds the normal value. Cells are not consistent. The capacity of some cells deteriorates too fast or the internal resistance of some cells is too high.	If the battery cannot be recovered due to protection against abnormality contact local engineers to rectify the fault.
Under voltage protection fails	The battery voltage is less than 44.8V. The minimum cell voltage is less than 2.8V	The mains power failure has lasted for a long time. Cells are not consistent. The capacity of some cells deteriorates too fast or the internal resistance of some cells is too high.	Same as above.
Charge or dis-charge high temperature protection fails	The maximum cell temperature is greater than 60℃	The battery ambient temperature is too high. There are abnormal heat sources around	Same as above.
Charge low temperature protection fails	The minimum cell temperature is less than 0℃	The battery ambient temperature is too low.	Same as above.
Discharge low temperature protection fails	The minimum cell temperature is less than -20℃	The battery ambient temperature is too low.	Same as above.

10 Technical Specifications

Model		SE-F12 Max
Main Parameters		
Battery Chemistry		$LiFePO_4$
Rated Capacity (Ah) [1]		230
Scalability [2]		Max.32 pcs in parallel
Nominal Voltage (V)		51.2
Operating Voltage (V)		44.8~57.6
Nominal Energy (kWh)		11.8
Usable Energy (kWh) [1]		11.8
Max. Output Power (kW)		11.8
Charge Current (A) [3]	Recommend	115
	Max. Continuous	230
	Peak	280 (10 sec)
Discharge Current (A) [3]	Recommend	115
	Max. Continuous	230
	Peak	280 (10 sec)
Other Parameters		
Recommend Depth of Discharge		90% DoD
Dimension (W/H/D, mm) (Without hanging board and terminals)		464 x 767 x 244.5
Weight Approx.		93kg
Display		LCD (SOC, Alarm)
Ingress Protection Rating / Enclosure Rating		IP65/NEMA 3R
Operating Temperature		Charge: 0℃~55℃ (-20℃~55℃, with optional heating film) Discharge: -20℃~55℃
Storage Temperature		0℃~35℃
Relative Humidity		95% (non-condensing)

Altitude (m)	≤3,000
Cycle Life	≥6,000(25℃±2℃/77℉ ±35.6℉ , 70%EOL)
Max. Energy RTE (DC)[1]	95%
Isolation Protection	Built-in Circuit Breaker
Installation	Wall-Mounted, Floor-Mounted
Communication Port	CAN2.0, RS485, Bluetooth
Certification	UN38.3, CE, CB
Energy Throughput[4]	37MWh

Notes:

[1]Test conditions:25℃±2°C/77°F±35.6°F, at beginning of life, 0.5C charge & 0.5C discharge, 100%DOD.

[2]Max.64 pcs can parallel with CAN-Bridge.

[3]The current is affected by temperature and SOC.

[4]Conditions apply, refer to Deye Warranty Letter.

11 Environmental Disposal

Used batteries can not be disposed of as household waste. You are obliged to handle waste batteries, such as removal of privacy on product, and return them to designated or authorized recovery point according to applicable regulations and standards on waste battery disposal.

Attention:

(1) Do not dispose of batteries and rechargeable batteries as domestic waste! You are legally obliged to return used batteries and rechargeable batteries.

(2) Waste batteries may contain pollutants that can damage the environment or your health if improperly stored or handled.

(3) Batteries also contain iron, lithium and other important raw materials, which can be recycled.

For more information, please visit http://www.deyeess.com. Do not dispose of batteries as household waste!

12 Transportation Requirements

1. The battery products should be transported after packaging and during the transportation process. Severe vibration, impact, or extrusion should be prevented to prevent sun and rain. It can be transported using vehicles such as cars, trains, and ships.

2. Always check all applicable local, national, and international regulations before transporting a Lithium Iron Phosphate battery.

3. Transporting an end-of-life, damaged, or recalled battery may, in certain cases, be specially limited or prohibited.

4. The transport of the Li-Ion battery falls under hazard class UN3480, class 9. For transport over water, air and land, the battery falls within packaging group PI965 Section I. Use Class 9 Miscellaneous Dangerous Goods and UN Identification labels for transportation of lithium-ion batteries which are assigned Class 9. Refer to relevant transportation documents.

Class 9 Miscellaneous Dangerous Goods and UN Identification Label

13 EU Declaration of Conformity

CE

NINGBO DEYE ESS TECHNOLOGY CO., LTD. confirms herewith that the products described in this document are in compliance with the fundamental requirements and other relevant provisions of the above mentioned directives.

251216055

www.deyeess.com

EU Declaration of Conformity

Product:Rechargeable Li-ion Battery System
System models:SE-F12 Max

Name and address of the manufacturer: NINGBO DEYE ESS TECHNOLOGY CO., LTD.
No.568, South Rixian Road, Binhai Economic Development Zone, Cixi, Ningbo, Zhejiang, P.R.China

This declaration of conformity is issued under the sole responsibility of the manufacturer. Also this product is under manufacturer's warranty.
This declaration of conformity is not valid any longer: if the product is modified, supplemented or changed in any other way, as well as in case the product is used or installed improperly.

The object of the declaration described above is in conformity with the relevant Union harmonization legislation: The Electromagnetic Compatibility (EMC) Directive 2014/30/EU;the Radio Equipment Directive (RED)2014/53/EU and the restriction of the use of certain hazardous substances (RoHS) Directive 2011/65/EU&(EU)2015/863.

References to the relevant harmonized standards used or references to the other technical specifications in relation to which conformity is declared:

EN IEC 61000-6-1: 2019 EN IEC 61000-6-3: 2021	●
EN 301908-1 V15.2.1:2023	●
EN 301908-2 V131.1：2020	●
EN 301908-13 V3.2.1:2022	●
EN 301 511 V12.5.1:2017	●
EN IEC 62311:2020	●
EN 301 489-1 V2.2.3：2019	●
EN 301489-52 V1.3.1:2024	●
EN 301489-1 V2.2.3:2019	●

KunLei Yu

Nom et Titre / Name and Title:

KunLei Yu
Test Manager

宁波德业储能科技有限公司
NINGBO DEYE ESS TECHNOLOGY CO., LTD

Au nom de / On behalf of:
Date / Date (yyyy-mm-dd):
A / Place：

NINGBO DEYE ESS TECHNOLOGY CO.,LTD
2025-12-16
Ningbo, China

EU DoC–*v1*

Service Hotline: +86-0574-86320560
Email: service-ess@deye.com.cn
Website: http://deyeess.com