kensol
HVAC

INSTALLATION, OPERATION AND USE INSTRUCTION

KENSOL Heat Pump model:
KTM 6 KW, KTM 10 KW, KTM 14 KW, KTM 17 KW

Table of contents

1. **INTRODUCTION** **1**
   - 1.1 Law 1
   - 1.2 Risk of electrocution 2
   - 1.3 Consumer information and safety 2
   - 1.4 Warranty protection 2
   - 1.5 Components of the set 2
   - 1.6 Disassembly 2
   - 1.7 Reuse 2
   - 1.8 Disposal and Recycling 2
   - 1.9 Warnings and Symbols 2
2. **INTRODUCTION** **3**
   - 2.1 Product overview 3
   - 2.2 Heating tables 3
   - 2.3 Cooling capacity tables 5
   - 2.4 Heat pump operating envelope 6
   - 2.5 Technical data 7
   - 2.6 Device dimensions 8
   - 2.7 Heat pump construction diagram 10
3. **INSTALLATION** **11**
   - 3.1 Installation details 11
   - 3.2 Condensate drainage 12
   - 3.3 Installation location 13
   - 3.4 Installation diagrams 13
   - 3.5 Hydraulic connection 14
   - 3.6 Electrical connection 16
4. **INSTALLATION OF KT-MULTI CONTROLLER** **19**
   - 4.1 Electrical diagram of KT-MULTI module 19
   - 4.2 Electrical installation of KT-MULTI controller 21
   - 4.3 Technical data of control automation 23
   - 4.4 Description of controller installation 24
   - 4.5 Installation of KT-MULTI module 25
   - 4.6 Installation of temperature sensors 26
   - 4.7 Connecting pumps 28
   - 4.8 Connecting a room thermostat 30
   - 4.9 Connecting the Internet module 30

5. **CONTROLLER OPERATION** **31**
5.1 Setting of set temperature 32
5.2 Time schedules 33
5.3 Weather control 34
5.4 Mode settings 35
5.5 User settings 37
5.6 Cooperation with the Internet module 38

6. **DESCRIPTION OF SERVICE PARAMETERS** **39**
6.1 Sample installation diagrams and suggested settings 46

1. Introduction

This guide contains instructions for installing, operating and using KENSOL Inverter Air Heat Pump. The following safety guidelines are designed to prevent unforeseen hazards and damage resulting from improper or unsafe operation of the device. Questions about this equipment should be directed to the manufacturer or an authorized KENSOL service partner. It is imperative that you read all of the information in this instruction and user guide before beginning installation and use. Any activity that contravenes the provisions of the stipulations may result in loss of life or health.

NOTE TO INSTALLER: THIS INSTRUCTION CONTAINS IMPORTANT INFORMATION ON THE INSTALLATION, OPERATION AND SAFE USE OF THIS DEVICE. THIS INFORMATION SHOULD BE PROVIDED TO THE OWNER OR OPERATOR OF THE DEVICE AFTER INSTALLATION. IT IS FORBIDDEN TO CARRY OUT ANY ACTIVITY THAT CONTRADICTS THE PROVISIONS OF THIS INSTRUCTION. THE INSTALLER SHOULD READ THE ENTIRE CONTENTS OF THE INSTRUCTION BEFORE STARTING ANY WORK. MATTERS OF CONCERN TO THE INSTALLER SHOULD BE CONSULTED DIRECTLY WITH THE MANUFACTURER. THE INSTALLER SHOULD, HAVE ALL THE LEGAL AUTHORIZATIONS NECESSARY TO INSTALL EQUIPMENT CONTAINING FLUORINATED GREENHOUSE GASES.

NOTE TO USERS: THIS INSTRUCTION CONTAINS IMPORTANT INFORMATION THAT WILL HELP IN THE OPERATION AND MAINTENANCE OF THE HEAT PUMP. KEEP IT FOR FUTURE USE.

Remember the system contains fluorinated liquor gas - difluoromethane (R 32) any installation activities, servicing and use should be carried out by entities experienced and authorized to perform such work. A list of the manufacturer's authorized service partners is available on its website. If this instruction is lost or destroyed, the user may request a copy from the manufacturer.

WARNING - READ AND FOLLOW ALL WARNINGS INCLUDED IN THIS INSTRUCTION BEFORE INSTALLING THIS PRODUCT. FAILURE TO FOLLOW SAFETY WARNINGS AND INSTRUCTIONS MAY RESULT IN SERIOUS PERSONAL INJURY, DEATH OR PROPERTY DAMAGE. THE MANUFACTURER SHALL NOT BE LIABLE FOR ANY DAMAGE CAUSED BY FAILURE TO COMPLY WITH THE PROVISIONS OF THIS INSTRUCTION OR IMPROPERLY PERFORMED INSTALLATION OR OPERATION OF THE DEVICE.

1.1 LAW:

KENSOL EVI DC inverter heat pump shall be installed in accordance with the indications of technical knowledge and in accordance with the laws generally applicable in the Republic of Poland on the date of installation. The installation shall be carried out in accordance with the provisions of the Construction Law and in accordance with the provisions of legal acts regulating the installation and use of equipment containing fluorinated greenhouse gases. By proceeding with the installation, the installer confirms that he has adequate knowledge, skills and experience, and that he is familiar with all technical standards necessary for the proper installation of KENSOL heat pump. The beginning of the installation is tantamount to the installer accepting full responsibility for the proper execution of the installation work. The owner of the device has the right to verify the authorizations and permits used by the installer. If doubts are raised about the reliability of the installer, or if his qualifications are questioned, the user should use the services of another entity, a list of which can be found on the manufacturer's website.

1.2 RISK OF ELECTRIC SHOCK.

The electrical supply of this product must be carried out in accordance with the indications of technical knowledge and only by an entity that has the applicable authorization to perform

this type of work. Improper installation poses a risk of electric shock, which can cause death or serious injury to heat pump users, installers or others. Read and follow the detailed guidelines in this instruction, if you have any doubts about how to connect the electrical supply or find that the electrical supply equipment is not working properly, call an authorized service partner immediately to diagnose the problem.

WARNING - MINORS ARE NOT ALLOWED TO OPERATE THE DEVICE. ANY TAMPERING WITH THE PRODUCT MUST BE IN ACCORDANCE WITH THE PROVISIONS OF INSTRUCTION AND CAN ONLY BE DONE BY ADULTS.

1.3 CONSUMER INFORMATION AND SAFETY

KENSOL EVI DC inverter heat pumps are designed and manufactured to provide years of safe and reliable operation when installed, operated and maintained in accordance with the information provided in this instruction and the installation regulations referred to in the following sections. Read and follow all warnings and recommendations of the manufacturer. The consumer must refrain from any tampering with the device beyond those activities that are specifically stated in this instruction.

1.4 GUARANTEE PROTECTION

The guarantee terms and conditions of the device, as well as the procedure for handling claims are specified in the device's guarantee card. Any service work should be performed by an authorized entity with express authorization from the manufacturer to perform the work. Any case in which it is found that service work has been performed by an unauthorized party may result in the loss of guarantee protection.

The first commissioning can only be performed by an Authorized Service Center designated by the manufacturer.

1.5 KIT COMPONENTS

Make sure that all components are included in the package before starting installation:

— KENSOL KTM monobloc heat pump
— Anti-vibration pads - set of 4 pcs.
— KT-MULTI heat pump controller
— Control panel with room thermostat function
— ECOnet External Internet Module,
— 3 pcs of CT-10 temperature sensors,
— Installation Instruction.

1.6 DISASSEMBLY

The unit may only be disassembled by qualified service personnel. Disconnect the unit from the electrical power supply before disassembly. The heat pump contains refrigerant R32 – recovery and disposal of the refrigerant must be carried out in accordance with applicable fluorinated gases (F-gases) regulations. Do not attempt to open the compressor, heat exchanger, or any other pressurized components.

1.7 REUSE

The device may only be reused after its technical condition and the tightness of the refrigeration circuit have been checked by authorized service personnel. Relocation or resale requires verification by qualified personnel.

1.8 DISPOSAL AND RECYCLING

Do not dispose of the unit with household waste. The device must be taken to a collection point for waste electrical and electronic equipment (WEEE) or to an authorized service provider that will ensure safe recovery and recycling of materials. All components containing R32 refrigerant, oils, or metals must be disposed of in accordance with applicable environmental protection regulations. The manufacturer recommends providing the service documentation when delivering the unit for recycling.

1.9 WARNINGS AND SYMBOLS

The crossed-out wheeled bin symbol means: Do not dispose of the device with household waste. Take it to a collection point for waste electrical and electronic equipment.

2. Introduction

2.1 PRODUCT OVERVIEW

KENSOL pump uses the energy in the air and transfers it to our buildings, allowing us to heat and cool our rooms and prepare hot water.

The KENSOL series uses a DC Twin Rotary inverter compressor thanks to this technology, the unit ensures smooth operation from -30°C to 43°C. The unique control logic allows our series to intelligently regulate the water temperature in accordance with the changing ambient temperature. With this feature, our users can enjoy comfort at a lower cost.

The control system guarantees simple and intuitive management of the entire heating system. A built-in installer and user assistant provides support for the setup and operation process.

The ability to equip the heating circuit system with additional room thermostats makes it possible to maintain the thermal comfort level set by the user from any room. A web-based system with a mobile application that performs management and service functions allows us to remotely operate and diagnose our device.

Reducing and preventing global warming is an important mission for KENSOL.

By using the low greenhouse effect potential of R32 refrigerant, the device is part of the green trend. In addition, the use of R32 refrigerant provides 20% higher efficiency at low ambient temperatures.

2.2 HEATING TABLES

			KTM6kW							
MAX	MAX Temp. of water (Inlet/ Outlet) (30°C/35°C)	Heating capacity (kW)	3.8	4.3	5.1	6.1	7.1	8.4	8.9	9.3
		Current consumption	1.4	1.5	1.5	1.6	1.7	1.9	1.9	1.9
		COP	2.69	2.93	3.37	3.84	4.23	4.49	4.77	4.97
MIN	MIN Temp. of water (Inlet/ Outlet) (30°C/35°C)	Heating capacity (kW)	0.6	0.7	0.8	0.9	1.2	1.6	1.7	1.9
		Current consumption	0.19	0.20	0.21	0.23	0.28	0.32	0.34	0.36
		COP	3.27	3.41	3.63	4.01	4.38	4.91	5.09	5.14
MAX	MAX Temp. of water (Inlet/ Outlet) (40°C/45°C)	Heating capacity (kW)	3.7	4.1	4.9	5.9	6.9	8.1	8.6	9.0
		Current consumption	1.6	1.7	1.7	1.9	2.0	2.2	2.2	2.2
		COP	2.24	2.44	2.81	3.19	3.52	3.74	3.97	4.14
MIN	MIN Temp. of water (Inlet/ Outlet) (40°C/45°C)	Heating capacity (kW)	0.6	0.7	0.7	0.9	1.2	1.5	1.7	1.8
		Current consumption	0.22	0.24	0.25	0.27	0.32	0.37	0.40	0.42
		COP	2.72	2.84	3.02	3.34	3.64	4.08	4.23	4.27
MAX	MAX Temp. of water (Inlet/ Outlet) (50°C/55°C)	Heating capacity (kW)	3.5	4.0	4.7	5.7	6.6	7.8	8.3	8.6
		Current consumption	1.9	1.9	2.0	2.1	2.2	2.5	2.5	2.5
		COP	1.89	2.05	2.36	2.69	2.96	3.15	3.35	3.48
MIN	MIN Temp. of water (Inlet/ Outlet) (50°C/55°C)	Heating capacity (kW)	0.6	0.6	0.7	0.9	1.1	1.5	1.6	1.7
		Current consumption	0.25	0.27	0.28	0.31	0.37	0.42	0.45	0.48
		COP	2.29	2.39	2.54	2.81	3.07	3.44	3.57	3.60
Outdoor temperature (°C)			-25	-20	-12	-7	0	7	15	21

KTM10kW

MAX	MAX Temp. of water (Inlet/ Outlet) (30°C/35°C)	Heating capacity (kW)	5.9	6.6	7.9	9.5	11.0	13.0	13.8	14.4
		Current consumption	2.3	2.4	2.4	2.6	2.7	3.0	3.0	3.0
		COP	2.58	2.81	3.23	3.68	4.05	4.30	4.58	4.76
MIN	MIN Temp. of water (Inlet/ Outlet) (30°C/35°C)	Heating capacity (kW)	1.8	1.9	2.2	2.6	3.4	4.4	4.9	5.2
		Current consumption	0.54	0.57	0.60	0.66	0.78	0.90	0.96	1.02
		COP	3.26	3.40	3.62	4.00	4.36	4.89	5.07	5.12
MAX	MAX Temp. of water (Inlet/ Outlet) (40°C/45°C)	Heating capacity (kW)	5.7	6.4	7.6	9.2	10.7	12.5	13.3	13.9
		Current consumption	2.6	2.7	2.8	3.0	3.2	3.5	3.5	3.5
		COP	2.14	2.34	2.69	3.06	3.37	3.58	3.81	3.96
MIN	MIN Temp. of water (Inlet/ Outlet) (40°C/45°C)	Heating capacity (kW)	1.7	1.9	2.1	2.5	3.3	4.2	4.7	5.0
		Current consumption	0.63	0.66	0.70	0.77	0.90	1.04	1.11	1.18
		COP	2.71	2.83	3.01	3.33	3.63	4.07	4.22	4.26
MAX	MAX Temp. of water (Inlet/ Outlet) (50°C/55°C)	Heating capacity (kW)	5.4	6.1	7.3	8.8	10.2	12.0	12.8	13.3
		Current consumption	3.0	3.1	3.2	3.4	3.6	4.0	4.0	4.0
		COP	1.81	1.97	2.27	2.58	2.84	3.02	3.21	3.34
MIN	MIN Temp. of water (Inlet/ Outlet) (50°C/55°C)	Heating capacity (kW)	1.6	1.8	2.0	2.4	3.1	4.1	4.5	4.8
		Current consumption	0.71	0.75	0.79	0.87	1.03	1.19	1.27	1.35
		COP	2.28	2.38	2.54	2.80	3.06	3.43	3.55	3.59
Outdoor temperature (°C)			-25	-20	-12	-7	0	7	15	21

KTM14kW

MAX	MAX Temp. of water (Inlet/ Outlet) (30°C/35°C)	Heating capacity (kW)	8.2	9.3	11.0	13.3	15.5	18.2	19.3	20.1
		Current consumption	3.1	3.2	3.3	3.5	3.7	4.1	4.1	4.1
		COP	2.65	2.89	3.33	3.78	4.17	4.43	4.71	4.90
MIN	MIN Temp. of water (Inlet/ Outlet) (30°C/35°C)	Heating capacity (kW)	2.4	2.6	2.9	3.5	4.6	5.9	6.5	7.0
		Current consumption	0.72	0.76	0.80	0.88	1.04	1.20	1.28	1.36
		COP	3.28	3.42	3.64	4.02	4.39	4.92	5.10	5.15
MAX	MAX Temp. of water (Inlet/ Outlet) (40°C/45°C)	Heating capacity (kW)	8.0	8.9	10.6	12.8	14.9	17.6	18.7	19.4
		Current consumption	3.6	3.7	3.8	4.1	4.3	4.8	4.8	4.8
		COP	2.21	2.40	2.77	3.15	3.47	3.68	3.92	4.08
MIN	MIN Temp. of water (Inlet/ Outlet) (40°C/45°C)	Heating capacity (kW)	2.3	2.5	2.8	3.4	4.4	5.7	6.3	6.8
		Current consumption	0.84	0.88	0.93	1.02	1.21	1.39	1.48	1.58
		COP	2.73	2.84	3.03	3.35	3.65	4.09	4.24	4.28
Outdoor temperature (°C)			-25	-20	-12	-7	0	7	15	21

KTM14kW

MAX	MAX Temp. of water (Inlet/ Outlet) (50°C/55°C)	Heating capacity (kW)	7.6	8.6	10.2	12.3	14.3	16.8	17.9	18.6
		Current consumption	4.1	4.2	4.4	4.6	4.9	5.4	5.4	5.4
		COP	1.86	2.03	2.33	2.65	2.92	3.10	3.30	3.43
MIN	MIN Temp. of water (Inlet/ Outlet) (50°C/55°C)	Heating capacity (kW)	2.2	2.4	2.7	3.3	4.2	5.5	6.0	6.5
		Current consumption	0.95	1.00	1.06	1.16	1.37	1.58	1.69	1.80
		COP	2.30	2.39	2.55	2.82	3.07	3.45	3.57	3.61
Outdoor temperature (°C)			-25	-20	-12	-7	0	7	15	21

KTM17kW

MAX	MAX Temp. of water (Inlet/ Outlet) (30°C/35°C)	Heating capacity (kW)	10.4	11.7	13.9	16.8	19.5	23.0	24.4	25.5
		Current consumption	4.0	4.1	4.2	4.5	4.7	5.2	5.2	5.2
		COP	2.63	2.87	3.30	3.76	4.14	4.40	4.67	4.87
MIN	MIN Temp. of water (Inlet/ Outlet) (30°C/35°C)	Heating capacity (kW)	3.0	3.3	3.7	4.5	5.8	7.5	8.3	8.9
		Current consumption	0.92	0.97	1.02	1.12	1.33	1.53	1.63	1.73
		COP	3.27	3.41	3.63	4.01	4.37	4.90	5.09	5.13
MAX	MAX Temp. of water (Inlet/ Outlet) (40°C/45°C)	Heating capacity (kW)	10.1	11.3	13.4	16.2	18.8	22.2	23.6	24.6
		Current consumption	4.6	4.7	4.9	5.2	5.5	6.1	6.1	6.1
		COP	2.19	2.39	2.75	3.13	3.44	3.66	3.89	4.05
MIN	MIN Temp. of water (Inlet/ Outlet) (40°C/45°C)	Heating capacity (kW)	2.9	3.2	3.6	4.3	5.6	7.2	8.0	8.6
		Current consumption	1.06	1.12	1.18	1.30	1.54	1.77	1.89	2.01
		COP	2.72	2.83	3.02	3.34	3.64	4.08	4.23	4.27
MAX	MAX Temp. of water (Inlet/ Outlet) (50°C/55°C)	Heating capacity (kW)	9.6	10.8	12.9	15.5	18.1	21.3	22.6	23.5
		Current consumption	5.2	5.4	5.6	5.9	6.2	6.9	6.9	6.9
		COP	1.85	2.01	2.31	2.63	2.90	3.08	3.28	3.41
MIN	MIN Temp. of water (Inlet/ Outlet) (50°C/55°C)	Heating capacity (kW)	2.8	3.1	3.4	4.2	5.4	6.9	7.7	8.2
		Current consumption	1.21	1.28	1.35	1.48	1.75	2.02	2.15	2.29
		COP	2.29	2.39	2.54	2.81	3.07	3.44	3.56	3.60
Outdoor temperature (°C)			-25	-20	-12	-7	0	7	15	21

2.3 TABELE WYDAJNOŚCI CHŁODNICZEJ

KTM6kW

MAX	Cooling capacity (kW)	7.8	7.2	6.2	5.8
	Current consumption (kW)	2.4	2.4	2.2	2.0
	EER	3.25	2.98	2.85	2.85
MIN	Cooling capacity (kW)	1.3	1.1	1.0	0.9
	Current consumption (kW)	0.3	0.3	0.3	0.3
	EER	4.10	3.57	3.41	3.27
Outdoor temperature (°C)		21	30	35	43

KTM10kW

MAX	Cooling capacity (kW)	10.3	9.4	8.2	9.0
	Current consumption (kW)	3.6	3.6	3.3	4.7
	EER	2.82	2.59	2.48	1.92
MIN	Cooling capacity (kW)	3.7	3.2	2.8	3.1
	Current consumption (kW)	0.9	0.9	0.9	0.8
	EER	3.96	3.44	3.29	3.84
Outdoor temperature (°C)		21	30	35	43

KTM14kW

MAX	Cooling capacity (kW)	14.5	13.3	11.5	10.7
	Current consumption (kW)	4.5	4.5	4.1	4.1
	EER	3.24	2.98	2.85	2.60
MIN	Cooling capacity (kW)	5.0	4.4	3.8	3.5
	Current consumption (kW)	1.2	1.2	1.1	1.1
	EER	4.13	3.59	3.43	3.29
Outdoor temperature (°C)		21	30	35	43

KTM17kW

MAX	Cooling capacity (kW)	18.3	16.8	14.6	13.6
	Current consumption (kW)	5.7	5.7	5.1	5.2
	EER	3.24	2.97	2.84	2.59
MIN	Cooling capacity (kW)	6.3	5.4	4.7	4.4
	Current consumption (kW)	1.5	1.5	1.4	1.3
	EER	4.09	3.56	3.40	3.26
Outdoor temperature (°C)		21	30	35	43

2.4 HEAT PUMP OPERATION ENVELOPE

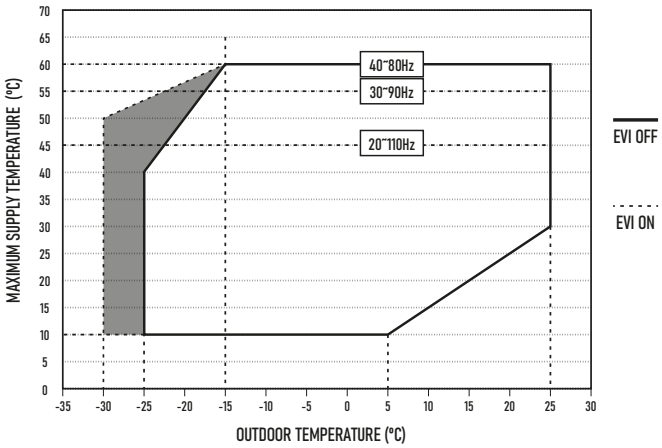

2.5 SPECIFICATIONS

Product model		KTM6KW	KTM10KW	KTM14KW	KTM17KW
Heating mode	Heating capacity (kW)	1.57~8.40	4.40~13.00	5.9~18.2	7.5~23.0
	Current consumption (kW)	0.32~1.87	0.90~3.02	1.20~4.11	1.53~5.23
	Znamionowy prąd roboczy (A)	1.42~8.30	1.39~4.68	1.86~6.37	2.37~8.11
	COP	4.49~4.91	4.30~4.90	4.43~4.92	4.40~4.90
Cooling mode	Cooling capacity (kW)	0.99~6.22	2.80~8.20	3.81 ~11.53	4.73~14.6
	Current consumption (kW)	0.29~2.18	0.85~3.31	1.11 ~4.05	1.39~5.14
	Znamionowy prąd roboczy (A)	1.28~9.67	1.32~5.13	1.72~6.28	2.16~7.97
	EER	2.85~3.41	2.48~3.29	2.85~3.43	2.84~3.40
DHW mode	Heating capacity (kW)	1.28~6.81	3.52~10.50	4.80~14.72	6.1 ~18.5
	Current consumption (kW)	0.31~2.13	0.88~3.39	1.17~4.60	1.53~5.97
	Znamionowy prąd roboczy (A)	1.38~9.45	1.36~5.26	1.82~7.15	2.37~9.26
	COP	3.2~4.1	3.1~4.0	3.2~4.1	3.1~4.0
Power supply (Voltage, Phases, Frequency)		230V/1 Ph /50-60Hz	380V/3Ph/50-60Hz		
Maximum water temperature		60°C			
Working range		-30~48°C			
Seasonal energy efficiency class (W35°)		A+++			
Seasonal energy efficiency class (W55°)		A++			
Refrigerant		R32			
Compressor		Panasonic			
IP degree (protection level)		IPX4	IPX4	IPX4	IPX4
Electric shock resistance		I	I	I	I
Noise (dB(A))		≤ 53	≤ 55	≤ 57	≤ 58
Water pressure drop (kPa)		31	25	35	45
Required minimum flow rates (l/ min)		23.3	36.6	51.6	66.6
Water connection (mm)		DN25	DN25	DN25	DN25
Min. cross section of the main power cable (mm²)		3x4	5x2.5	5x4	5x4

Product model	KTM6KW	KTM10KW	KTM14KW	KTM17KW
Recommended protection	C20A	C16A	C20A	C20A
Housing dimensions (w*d*h) (mm)	970x475x835	1100x475x985	1050x480x1330	1050x480x1330
Net weight / Gross weight (kg)	110/120	140/150	170/180	180/190
DC Fan Rated Speed (RPM)	850	850	850	820
Air Volume (m^3/h)	3200	3800	5000	6000
Seasonal Coefficient of Performance (SCOP) W35*	4,59	4,72	4,46	4,46
Seasonal Coefficient of Performance (SCOP) W55*	3,47	3,47	3,51	3,38
Annual energy consumption W35* (kWh)	2867	4295	7622	8214
Annual energy consumption W55* (kWh)	3983	5959	10032	11269

*moderate climate

Heating mode: Ambient Temp (DB/WB): 7/6°C. Water Temp (Inlet/Outlet): 30/35°C
Cooling Mode - Ambient Temp (DB/WB): 35/24°C Water Temp (Inlet/Outlet): 12/7°C DHW mode - Ambient temp (DB/WB): 20/15°C. Water Temp (Inlet/Outlet): 15/55°C

Attention:
The above design and specifications are subject to change without prior notice for product improvement. Detailed technical data of the devices can be found on the nameplates placed on the devices

2.6 DIMENSIONS OF THE DEVICE

KTM6KW

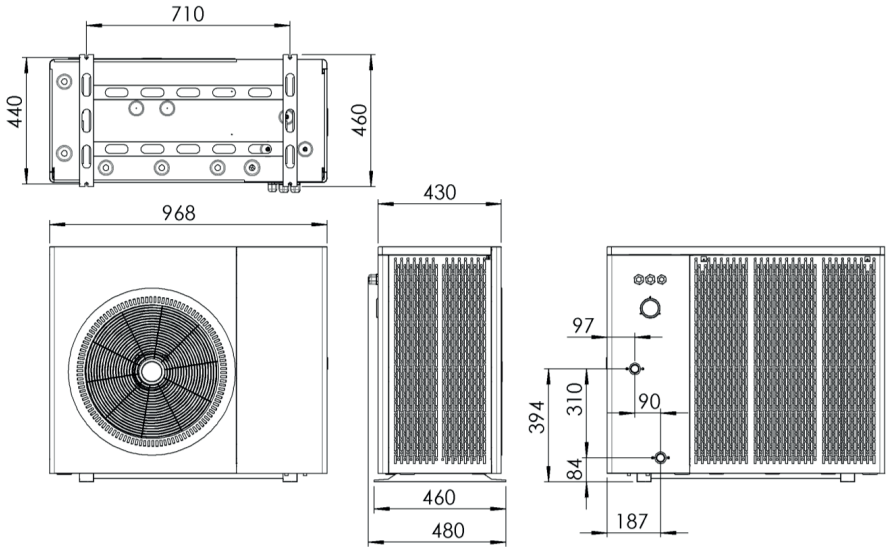

KTM10KW

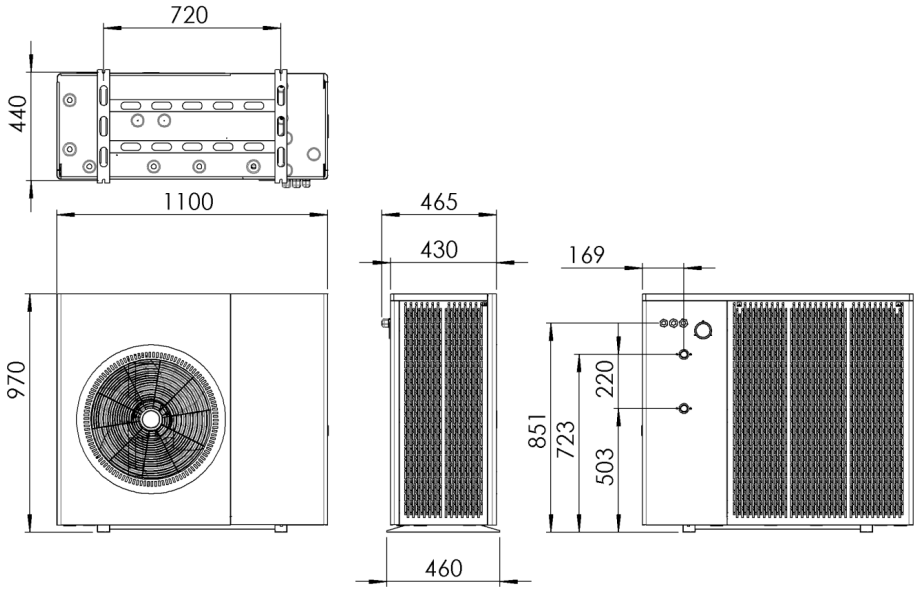

KTM14KW/KTM17KW

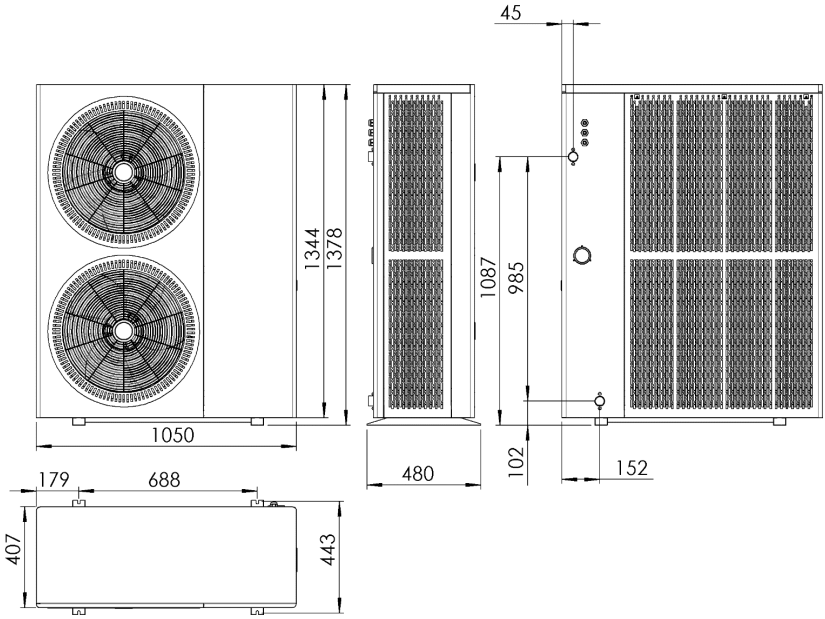

2.7 SCHEMAT BUDOWY POMPY CIEPŁA

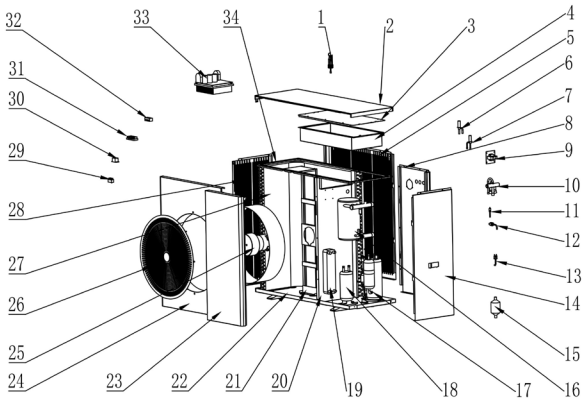

NR	Części zamienne	Kod
1	Flow sensor	DR-S00101020-00
2	Top cover	PT050202008KH5
3	Electrical box cover	PT050202008KH2
4	Electric cabinet	PT050202008KH1
5	Back mesh	PT05020200810-08
6	Electronic expansion valve 1	ZF-DZ00008SH-00
7	Electronic expansion valve 2	ZF-DZ00001SH-02
8	Right rear panel	PT05020200810-04
9	Induction choke	DR-D00300905-15
10	Four-way valve	ZF-SD00023CH-03
11	Needle valve	NZ-GJX010001-03
12	High pressure switch	DR-Y01440380-02
13	Low pressure switch	DR-Y02005015-01
14	Right side panel	PT05020200810-05
15	Filter	ZG-G051S0303-00
16	Shell heater exchanger	ZE-KG01ZF091-01
17	Compressor	ZY-D138ZBA2J-03
18	Tank	ZH-081514005-02
19	Plate heat exchanger	ZE-B36R20450-QT
20	Middle partition	PT05020200810-06
21	Fan bracket	PT05020200810-13
22	Frame	PT05020200810-01
23	Front right panel	PT05020200810-03
24	Wind shield	PT05020200810-02

NR	Części zamienne	Kod
25	Fan motor	DR-F00810080-00
26	Fan protection mesh	PT05020200810-16
27	Capacitor	ZC-030072602-00
28	Left mesh	PT05020200810-07
29	Common terminal block	DT-J13044501-02
30	Magnetic ring	DF-H10HX2017-01
31	Power terminals	DJ-J19032501-04
32	Functional terminals	DT-J06101001-06
33	Controller interface	DR-D00300905-15
34	Frame	PT05020200810-14

3. INSTALLATION

WARNING!
Do not install the heat pump near hazardous materials and areas. Do not install the heat pump under deeply sloping roofs without gutters, exposing the unit to excessive flooding and drenching. Place the heat pump on a structure founded on a stable foundation with adequate load-bearing capacity, such as a concrete foundation. This will allow proper drainage of condensate and rainwater from the base of the unit. Use anti-vibration washers for mounting. During operation of the device, condensate condenses from the evaporator, which drains at a constant rate, depending on the temperature and humidity of the air in the environment. The higher the ambient humidity, the greater the condensation will be. The lower part of the unit acts as a tray that retains rainwater and condensation. The drain holes located on the lower base plate of the unit should always be free of debris. It is required to raise the unit to a minimum height of 30 cm.

3.1 INSTALLATION DETAILS

All criteria given in the following sections are for minimum spacing. However, each installation should be evaluated on a case-by-case basis, taking into account local conditions such as the proximity and height of walls and the proximity of areas accessible to people. The heat pump should be placed in such a way as to provide clearance on all sides for maintenance and inspection.

1. The installation site of the heat pump must provide free air exchange, and the air inlet/outlet must not be obstructed.
2. Ensure adequate drainage of condensation, for example, into an absorbent substrate.
3. Do not install the device in areas of accumulation of contaminants, such as agresive gases (chlorine or acids), dust, sand, leaves, etc
4. To facilitate maintenance and troubleshooting, no obstructions around the unit should be closer than 0.5 m. There must be no obstructions that impede ventilation within 2 m vertically of the unit. (see Figure 1)
5. The heat pump must be installed on anti-vibration bushings to prevent vibration or unbalance.
6. Hydraulic lines must be installed with adequate support to prevent possible damage caused by vibration.
7. The outdoor unit should be connected to the system with flexible conduits to ensure compensation for any movement between the heat pump and the system.
8. Since the heat pump operates in bivalent mode, each installation must be equipped with an automatic peak heat source. Such a source must meet the following requirements:

a) It must be activated via a potential-free contact with the PC.

b) It must work for all heating circuits and DHW depending on demand

9. In order to protect the heat pump from impurities, it is absolutely necessary to install a magnetic separator and a mesh filter on the return
10. The heat pump system must operate in a closed system. In addition, such an installation should be protected against large pressure changes with a diaphragm vessel and against excessive pressure with a safety valve (max 3bar)
11. Heating water parameters:

a) Temperature: $\leq$60oC

b) pH: 7-9 pH

c) Alkalinity: 60mg/l<HCO3<300mg/l

d) Conductivity: <500µS/cm

e) Hardness: 3,5-8,4 odH

12. The unit must have external antifreeze protection. This protection is designed to prevent the circulating water in the system from freezing in the event of an electrical failure/outage. Acceptable anti-freeze solutions:

a) Propylene glycol solution to a concentration of 30%

b) Solution of other antifreeze with corrosion inhibitors

c) Anti-freeze valves

d) UPS-based anti-freeze systems with manufacturer's guarantee for tripping in emergency situations

NOTE
Own solutions are not allowed as the only option to protect the heat pump from freezing

3.2 CONDENSATE DRAINAGE

Condensation occurs during the heat pump defrost process. The frequency of this process and the rate of condensate drainage will depend on the outside temperature and humidity. The higher the humidity, the greater the condensation will be. The lower part of the device functions as a drip tray that catches rainwater and condensation. The drain holes, located on the lower base plate of the unit, should always be kept free of debris..

INSTALLATION LOCATION

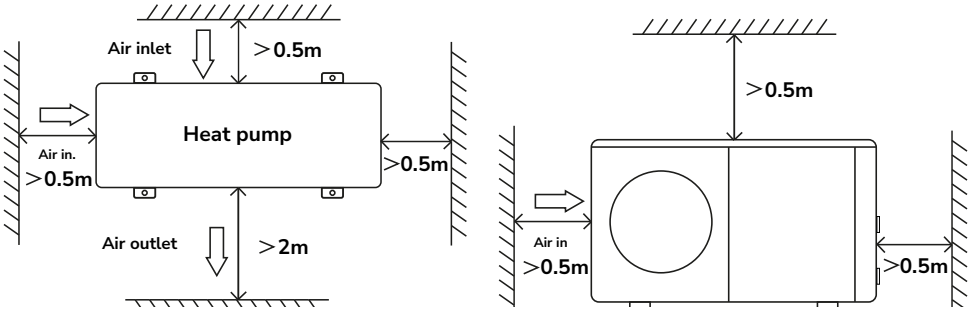

3.3 INSTALLATION DIAGRAMS

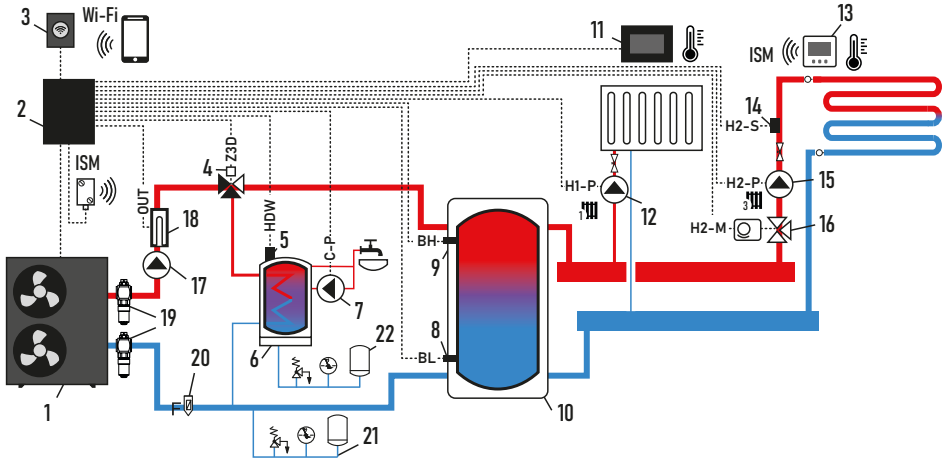

The hydraulic diagram shown is not a substitute for the design of the central heating system and is for illustrative purposes only..

Diagram with heat buffer and DHW tank: 1 - KENSOL KTM heat pump, 2 - KT-MULTI controller, 3 - Internet module, 4 - 3-way valve, 5 - DHW tank temp sensor, 6 - DHW tank, 7 - circulation pump, 8 - lower buffer temperature sensor, 9 - upper buffer temperature sensor, 10 - heat buffer, 11 - control panel with room thermostat function, 12 - circulating pump I circuit 1, 13 - wireless room thermostat, 14 - mixer temp sensor 2, 15 - circulating pump II circuit 2, 16 - mixing valve with actuator, 2, 17 - circulating pump, 18 - flow heater, 19 - antifreeze protection, 20 - magnetic separator + mesh filter, 21 - central heating safety group, 22 - DHW safety group.

3.4 HYDRAULIC CONNECTION

Required minimum flows:

Type of heat pump	KTM 6kW	KTM 10kW	KTM 14kW	KTM 17kW
Minimum flow [liter/minute]	23,3	36,6	51,6	66,6

To ensure minimum flow rates, hydraulic connections must be made with appropriate diameters.

Recommended pipe diameters:

Type of heat pump	KTM 6kW	KTM 10kW	KTM 14kW	KTM 17kW
PP	32mm	32mm	40mm	50mm
Clamping steel	28mm	28mm	35mm	42mm
PeX	32mm	32mm	40mm	63mm

NOTE! Avoid the use of unnecessary angle joints, connectors and constrictions. If there are a large number of connectors, increase the diameter of the wires. Pipelines and connections should be thermally insulated. It is recommended to connect the outdoor unit with flexible installation elements or use expansion joints.

BUFFER TANK

In heat pump heating systems, the buffer tank performs key functions. The main tasks of buffer tank

– heat accumulation for the defrost process,

– hydraulic separation of the heat pump circuit and the central heating system circuit, ensuring the minimum heating water flow rate required by the heat pump,

– possibility of expanding the heating system with other heat sources,

– extending the operating time of the heat pump in periods of partial demand, this affects the reduction of cycles of compressor start-ups extending its service life

– storage of thermal energy, e.g., during the cooperation of a heat pump with a PV plant

WARNING - In the case of a heating system based on a radiator system and the occurrence of other heat sources, it is necessary to include a buffer tank in the heat pump installation.

A minimum water charge should be ensured in the installation. For Kensol heat pumps, assume the relationship for the minimum water charge: 15L of discharge per 1kW of nominal PC power A buffer is not required, but it is recommended to install a heat buffer on the system in parallel connection due to a number of advantages. You can hook up the PC directly to the system, however, you must ensure a minimum water charge and minimum flows regardless of the external control of the circuits on the system.

DWH STORAGE TANK

The DHW tank is a tank equipped with a heat exchanger that stores hot water distributed for domestic use.

Average daily energy consumption for DHW heating per person can be assumed from 1.5 kWh to 2.5 kWh and water consumption of 50-70 L per person.

The use of DHW circulation can increase energy consumption for DHW purposes by up to two times.

When selecting a coil tank for a heat pump, it is important to pay attention to its appropriate capacity for the DHW demand and the heat transfer surface area.

For single-family houses, small and medium-sized heat pump installations, the minimum exchanger area should be taken as 0.2 m² per 1 kW (recommended 0.25 m² per 1 kW) of storage charging capacity.

3.5 ELECTRICAL CONNECTION

WARNING - Electrical shock hazard may occur when working on the device.

Before installing the heat pump, make sure that all high-voltage circuits are disconnected. Contact with these circuits can cause death or serious injury to users, installers and others from electrical shock, and can also cause damage to property.

NOTE - Before disconnecting the wires when servicing the heat pump, mark all wires. Wiring errors can cause incorrect and unsafe operation of the device. After servicing, check that the device is working properly.

SUPPLY

1. If the supply voltage is too low or too high, it may cause damage and/or unstable operation of the heat pump unit due to high inrush currents
2. The minimum starting voltage should be above 90% of the rated voltage. The allowable operating voltage range should be within ±10% of the rated voltage.
3. The wires used must be designed for permanent installation and be resistant to external conditions.
4. The cross-section of the wire depends on the distance between the device and the switchboard. The value should be verified by a person with appropriate electrical qualifications.
5. The electrical installation should be carried out by a person with the appropriate authorization and in accordance with applicable national regulations.
6. All power wires should be run in insulation. The length of the stripped section of wire should not be longer than 50mm.
7. Do not frequently interrupt the voltage supply to the heat pump, as this may shorten its life.
8. Do not unplug the wires and sensors located in the outdoor unit.

A PC<->KT-Multi communication wire is included with the controller.

MAIN POWER SUPPLY CONNECTION

NOTE - Before installing the heat pump, verify the connection power of the building and the protection used. In addition, note that the heat pump and the controller must be protected by a residual current circuit breaker with a tripping current of IΔn ≤ 30mA

1. The device should be powered directly from the electrical switchboard.
2. The heat pump should be protected by an overcurrent circuit breaker with characteristic C and a 30mA residual current device

Recommended protection and minimum cross-section of the main power wire:

1-phase system	(KTM6KW) C20A	3x4 mm²
3-phase system	(KTM10KW) C16A	5x2,5 mm²
3-phase system	(KTM14KW) C20A	5x4 mm²
3-phase system	(KTM17KW) C20A	5x4 mm²

3. The wire should be inserted through the cable gland and plugged in according to the wiring diagram.

3.6 MOTHERBOARD DIAGRAM

1-PHASE SYSTEM (KTM6KW)

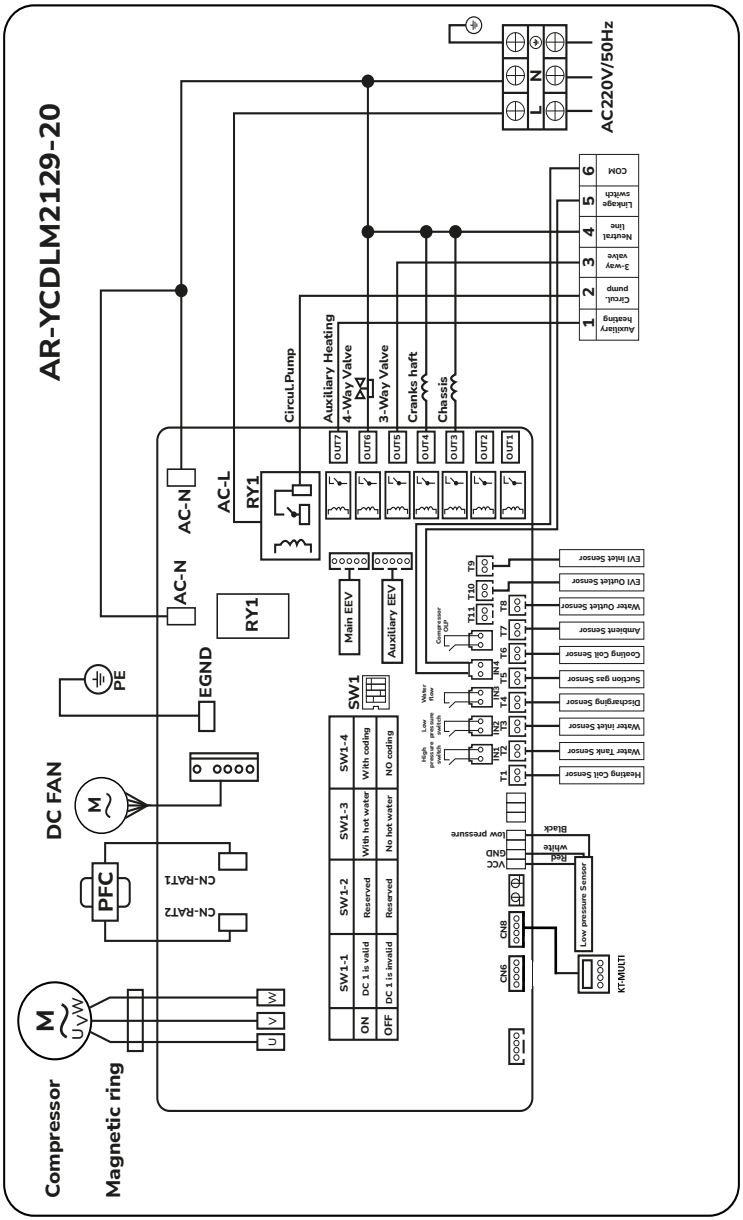

3-PHASE SYSTEM (KTM10KW)

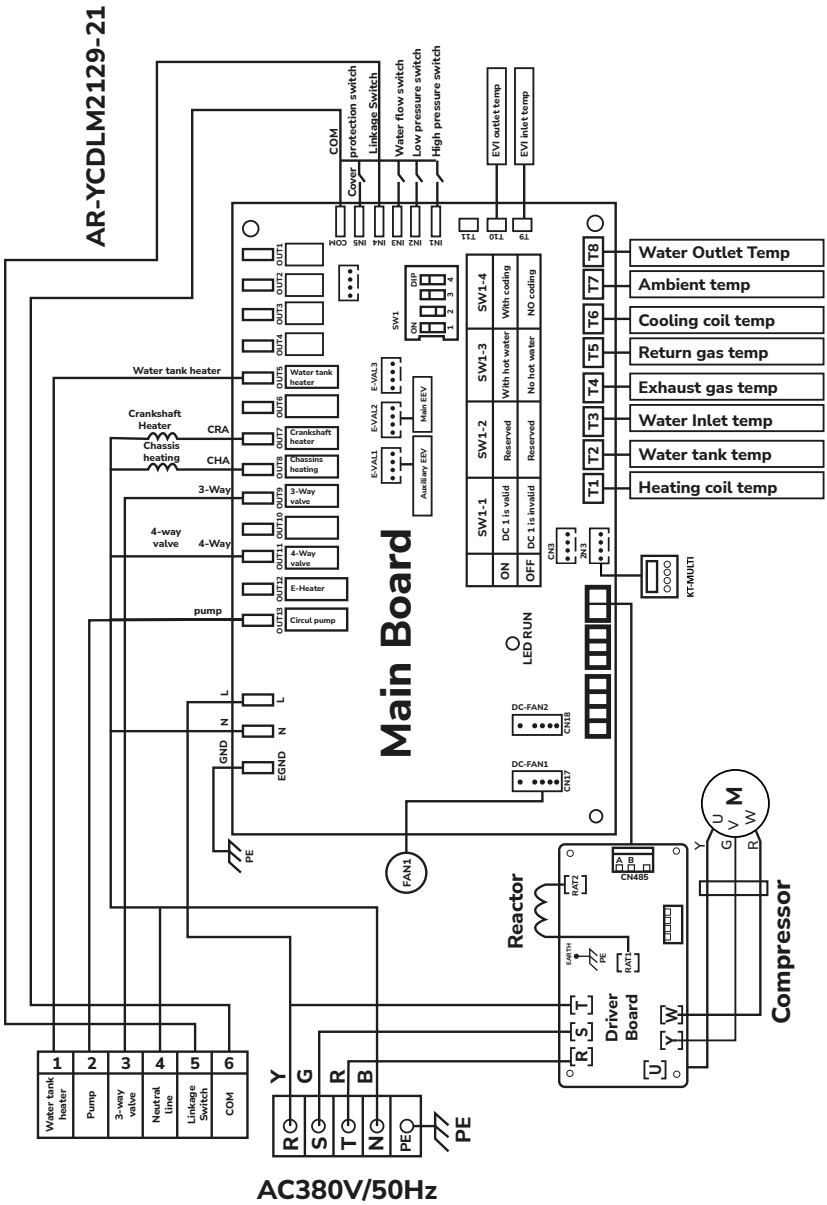

3-PHASE SYSTEM (KTM14KW/KTM17KW)

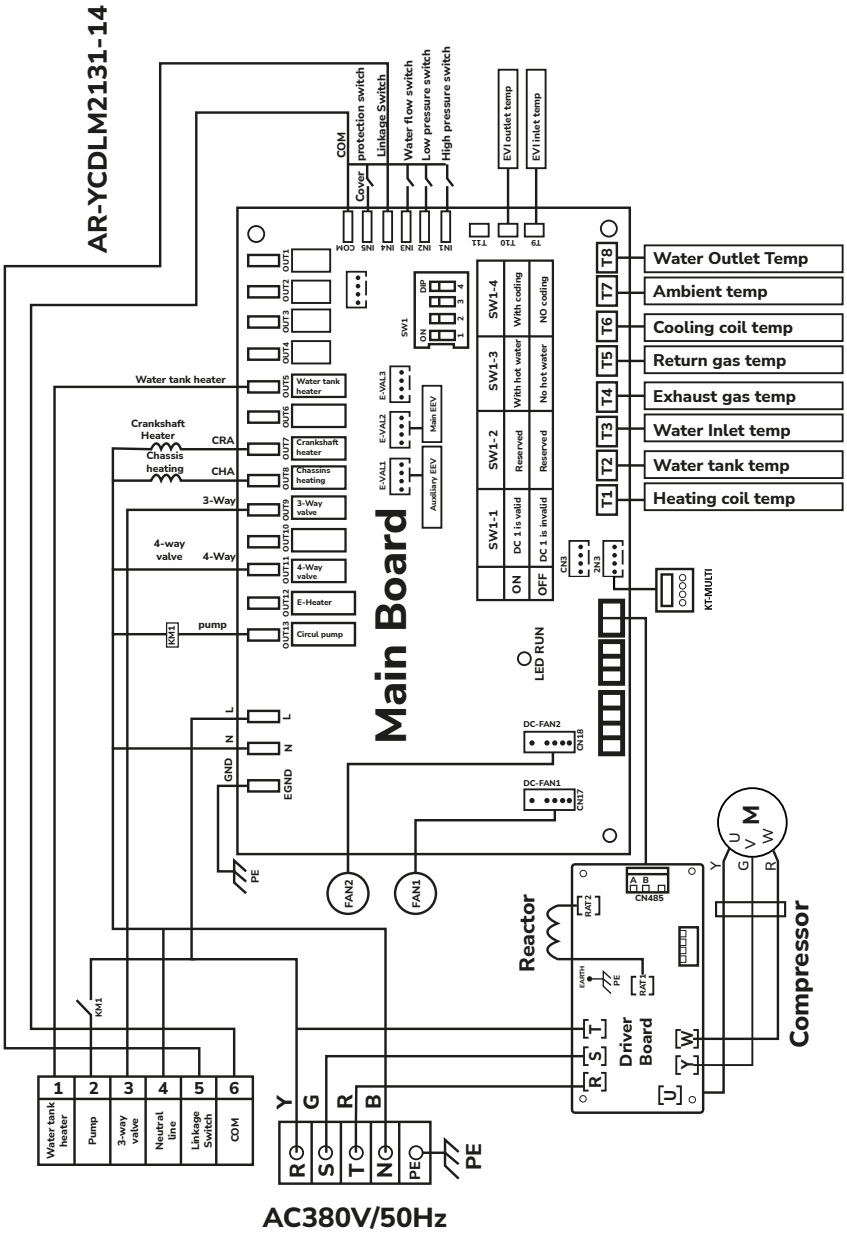

4.1 ELECTRICAL DIAGRAM OF KT-MULTI MODULE

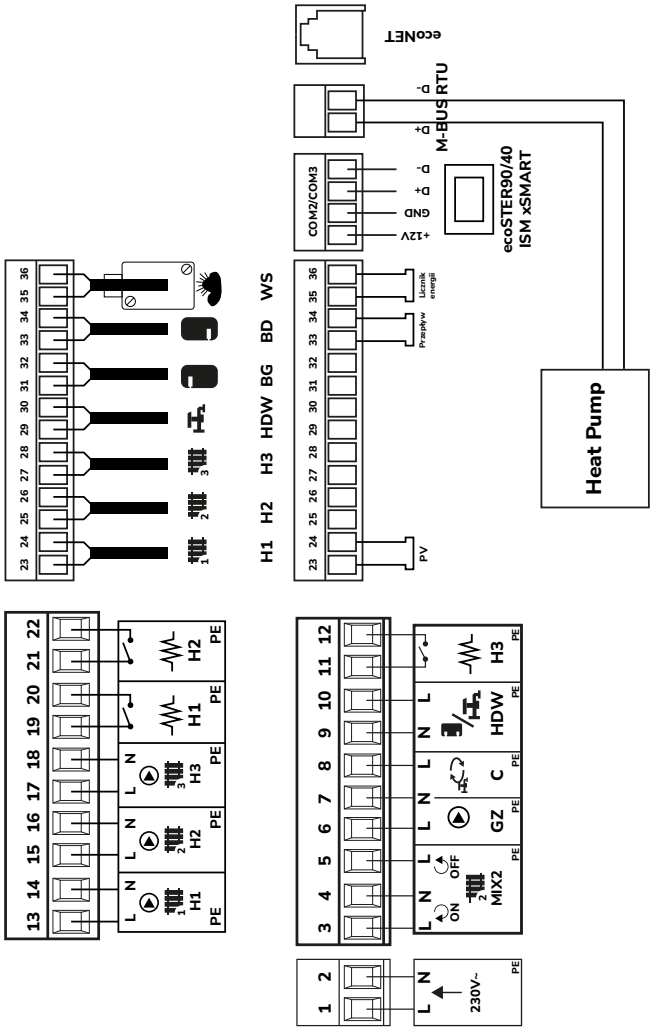

KT-MULTI MODULE CONNECTION DESCRIPTION

1-2 - power supply to the controller (220V - 240V)
3-5 - relay output of mixer 2 (230V) 6-7 - output of GZ circulating pump (230V)
7-8 - circulation pump output (230V)
9-10 - CH/DHW switching valve output (230V) 13-14 - circuit 1 pump output (230V)
15-16 - circuit 2 pump output (230V) 17-18 - circuit 3 pump output (230V)
11-12 - potential-free relay output of electric heater H1 19-20 - potential-free relay output of electric heater H2 21-22 - potential-free relay output of electric heater H3 23-24 - PV contact input for PV system
33-34 - Flow meter - can be configured as a contact input 35-36 - Energy meter
37-42 - H1, H2, H3 heating circuit temperature sensors 1-3 (CT-10 type) 43-44 - Domestic hot water (DHW) temperature sensor (CT-10 type) 45-46 - BH buffer high temperature sensor (CT-10 type)
47-48 - BL buffer low temperature sensor (CT-10 type) 49-50 - WS weather temperature sensor (CT-10 type)
COM2- Control panel (+12 V supply)
COM3 - Connector for additional modules (socket for connecting module B/ ISM xSMART radio module or ecoSTER40 wired thermostats)

ELECTRICAL DIAGRAM OF THE AUXILIARY MODULE

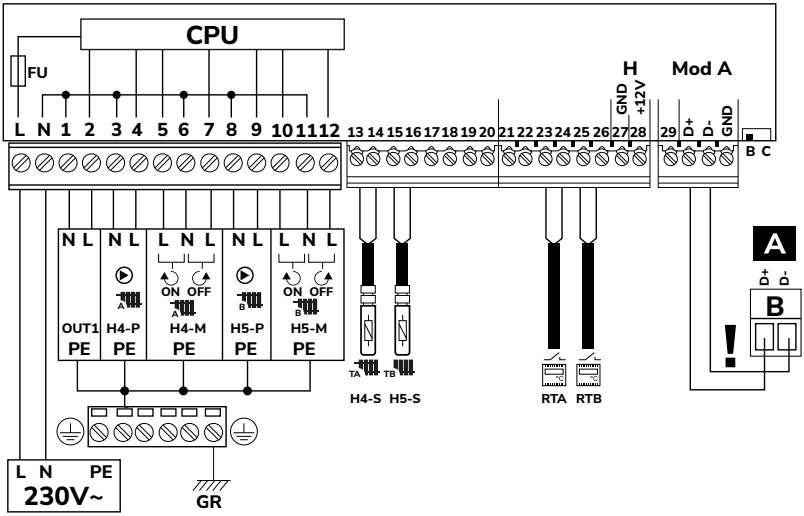

L N PE - mains supply 230 V~,

H4-P - water pump of circuit 4 (regulated),

H5-P - water pump of circuit 5 (regulated),

H4-M - electric actuator of circuit 4 (regulated),

H5-M - electric actuator of circuit 5 (regulated),

TA - water temperature sensor of circuit 4 (regulated) (CT-10 type),

TB - water temperature sensor of circuit 5 (regulated) (CT-10 type),

RTA - standard thermostat for circuit 4 (regulated) of the open-circuit type,

RTB - standard thermostat for circuit 5 (regulated) of the open-circuit type,

A - main controller

CAUTION - connect only with two wires (you cannot connect with four wires, because it risks damaging the controller). Switch in position B - the expansion module is used as module B, in position C - the expansion module is used as module C.

4.2 ELECTRICAL INSTALLATION OF THE CONTROLLER

The controller is designed to be supplied with 230 V~, 50 Hz. The electrical system should be:

- three-wire (with PE protective conductor),
- made in accordance with applicable regulations,
- equipped with a residual current circuit breaker with tripping current IΔn<30 mA to protect against electric shock and limit damage to the device, including protection against fire,
- protected by an inverter to ensure the correct time course of the regulator supply voltage, if there are or may be undesirable interference with this voltage in the installation, for example, by generator power, which may damage the regulator.

NOTES:

- **Risk of electric shock. When the controller is turned off, dangerous voltage is still maintained on its terminals. Therefore, before proceeding with installation work, it is essential to disconnect the mains supply and make sure that there is no dangerous voltage on the terminals and wires..**
- **Connection of any peripheral devices may only be carried out by a qualified person in accordance with applicable regulations. When doing so, it is important to remember the safety rules related to electric shock. The controller must be equipped with a set of plugs inserted in the connectors for powering 230 V~ devices.**
- **For safety reasons, the controller must absolutely be connected to the ~230 V power grid, observing the order in which the phase L and neutral N wires are connected. Make sure that the L and N wires are not interchanged within the building's electrical system, for example, in an electrical socket or distribution box.**

WIRING

NOTES: Before unscrewing the terminal cover, it is essential to disconnect the mains power supply.

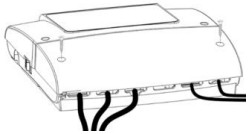

Terminal cover of the controller

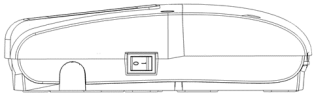

Mains switch

Before connecting wires, remove the terminal cover of the controller housing. Connect the wires to the screw terminals of the connector (5) and (6). Wires should be protected against pulling out with wire holders (1). Tighten the screws of the cable holder (2) with such force that the mechanical stresses against the wires do not cause them to be pulled out or loose from the terminals. It is also not allowed to coil excess wires and leave unconnected wires inside the controller. With the protective connector (7) of the controller should be connected to the protective wires of the devices connected to the controller and the protective wire of the power cable

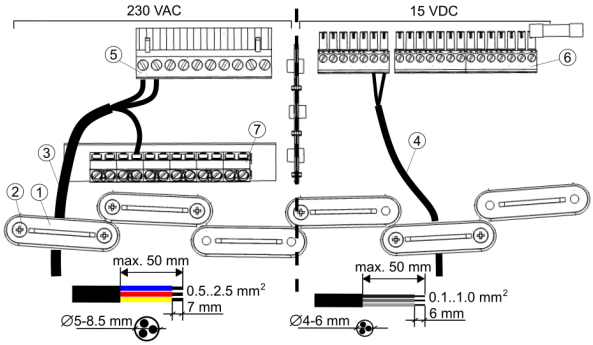

Connection of wires to the controller (terminal compartment): 1 - cable brackets, 2 - cable bracket screws, 3 - ~230 V mains voltage cables, 4 - signal cables, 5 - mains cable connectors ~230 V, 6 - signal wire connectors, 7 - protective wire connector.

NOTES: Due to the preservation of the IP20 degree of protection, all cable holders (1) should be installed, even when all holders are not required.

Before screwing on the terminal cover, arrange the wires so that their insulation is not damaged by the screws holding the cover or by cutting with the edge of the cover. The maximum length of isolation of the outer insulation is 50 mm. The cables should not come into contact with surfaces with temperatures above their nominal operating temperature. Always screw the terminal cover to the housing

4.3 TECHNICAL DATA OF CONTROL AUTOMATION

Controller

Power supply	230 V~, 50 Hz
Current drawn	0,4 A
Maximum rated current	6 A
Degree of protection	IP 20
Outdoor temperature	0...50°C
Storage temperature	0...65°C
Relative humidity	5...85%, without water vapor condensation
Temperature measurement range of the CT-10 sensor	-40...+100°C
Temperature measurement range of the CT-P sensor	-40...+40°C
Temperature measurement accuracy of the CT-10, CT-P sensor	±2°C
Connections	Screw terminals on the mains voltage side 0.75-2.5 mm². Screw terminals on the control side 0.14-1.0 mm²
Dimensions	234x225x64 mm
Mass	1,0 kg
Standards	PN-EN 60730-2-9 PN-EN 60730-1
Software class	A, according to. PN-EN 60730-1
Protection class	Class I
Degree of contamination	grade 2 according to. PN-EN 60730-2-9
Mounting method	Wall-mounted

Control panel

Power supply	12 VDC - directly from the controller socket
Consumed current (at 12V supply voltage)	0,15 A
Display	Color, graphic 480x272 px, with touch screen
Degree of protection	IP 20
Operating temp	0...50°C
Storage temp	0...65°C
Relative humidity	5...85%, without water vapor condensation
Screw terminals	Cross-section: 0.15...1.5 mm², tightening of 0.23 Nm, isolation of 7 mm
External dimensions	144x97x20 mm
Mass	0,2 kg
Standards	PN-EN 60730-2-9 PN-EN 60730-1
Software class	A

PURPOSE OF THE CONTROLLER

The controller is designed to control a central heating system with a heat pump. The controller can be used within the household and similar, as well as in light-industrialized buildings.

TRANSPORT AND STORAGE CONDITIONS

The controller must not be exposed to direct weather conditions, i.e. rain and sunlight. During transport, the controller must not be subjected to vibrations greater than those corresponding to typical conditions of wheeled transport.

4.4 DESCRIPTION OF CONTROLLER INSTALLATION

NOTES: The temperature of the exterior and mounting surface should not exceed the range of 0 - 50°C.

The control panel is designed to be mounted on the wall or in installation modules only in dry areas. The panel must not be used in conditions of condensation and protected from the effects of water. The panel should be mounted at a height that allows comfortable handling, typically 1.5 m above the floor.

In order to reduce interference with the panel's temperature measurement, avoid locations with strong sunlight, poor air circulation, close to heating equipment and directly next to doors and windows, typically at least 200 mm from the edge of the door.

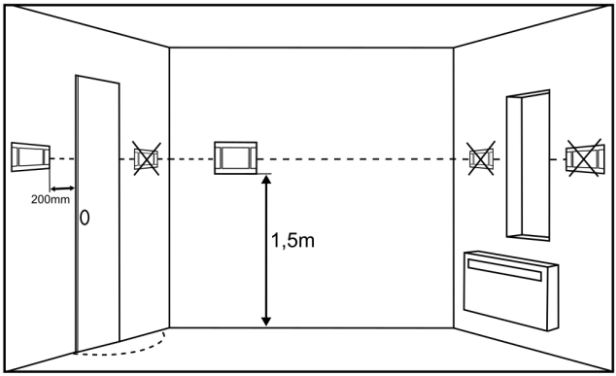

1. Installation of the control panel should be carried out in accordance with the following guidelines.
2. Disconnect the mounting frame (1) from the rear panel housing (2). The frame is attached to the panel housing with snaps. A flat screwdriver can be used to detach the frame.

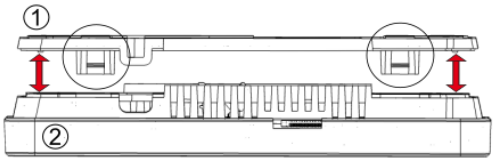

3. Cut the cover (3) of the screw clamp hole in four places with a sharp tool.

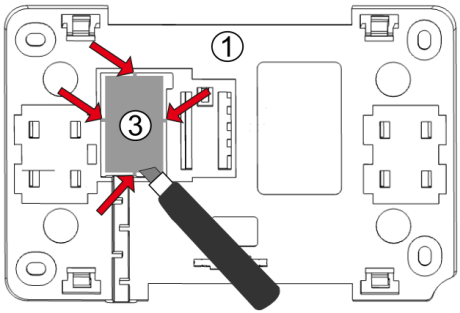

4. Connect the wires of the transmission cable connecting the panel to the controller to the screw terminal (4), as described (5). The cable connecting the panel to the controller may be recessed in the wall or may run along the surface of the wall, in which case the cable should be additionally placed in the cable channel (6) of the mounting frame. You cannot run the wire connecting the panel to the controller together with the cables of the building's electrical network. The cable should also not run near devices that emit strong electromagnetic fields

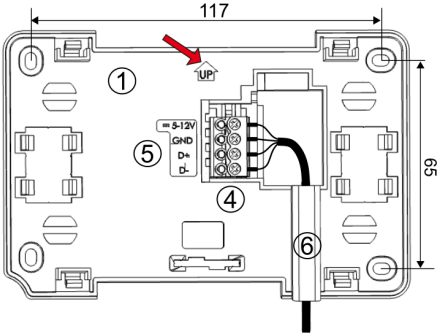

5. Drill holes in the wall and, with the help of screws, fix the mounting frame in the selected place of the wall, keeping it in the right position (UP). Then attach the panel to the mounting frame using the snaps.

4.5 INSTALLATION OF KT-MULTI MODULE

NOTES: The controller cannot be used as a free-standing device.

Screw the controller housing to a flat mounting surface, such as a wall. For this purpose, use four mounting points.

After installation, make sure that the device is fixed securely and it is not possible to detach it from the mounting surface.

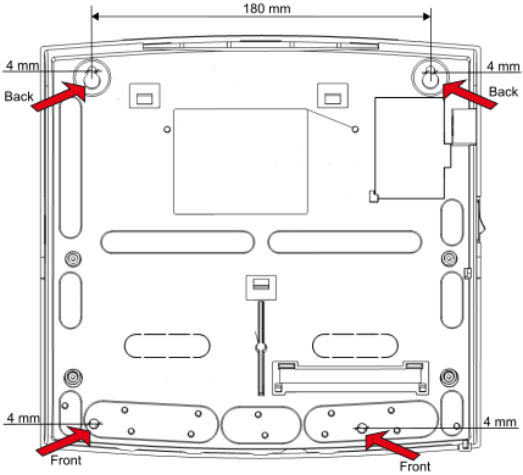

4.6 INSTALLATION OF TEMPERATURE SENSORS

The controller works only with CT-10 and CT6-P type sensors. The use of other sensors is prohibited. Connecting the wrong type will cause the controller to malfunction. At least one temperature sensor for the heating circuit is required to run the controller.

CIRCULATION SENSORS

The type CT-10 direct circulation sensor should be attached to the circulation supply pipe coming out of the heat source. Mount the sensor of the regulated circuit type CT-10 on the pipe, after the circuit pump. Sensors attached to the outer surface of the pipe and isolate from the environment with thermal insulation which should cover the sensor along with the pipe.

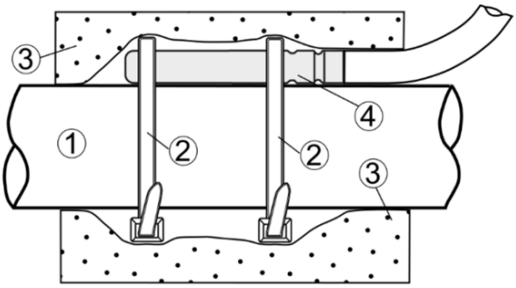

Temperature sensor installation: 1 - pipe, 2 - clamp, 3 - thermal insulation (insulation lagging), 4 - temperature sensor.

OUTDOOR TEMPERATURE SENSORS

The heat pump's operating algorithm can read the outside temperature based on two types of measurements. Operation can be based on the temperature reading from the heat pump's built-in temperature sensor or from an external sensor of the CT6-P type. During the initial start-up of the device, you should define which sensor should be used for the external temperature reading.

The optional CT6-P type outdoor temperature sensor should be mounted on the coldest wall of the building, usually the north side, in a covered location. The sensor should not be exposed to direct sunlight and rain. Mount the sensor at a height of at least 2 m above the ground, away from windows, chimneys and other heat sources that can interfere with the temperature measurement (at least 1.5 m). To connect the sensor, use a cable with a conductor cross-section of at least 0.5 mm² and a length of up to 25 m. The polarity of the wires is not important. The sensor should be screwed to the wall with mounting screws. The mounting screw holes are accessed by unscrewing the sensor housing cover.

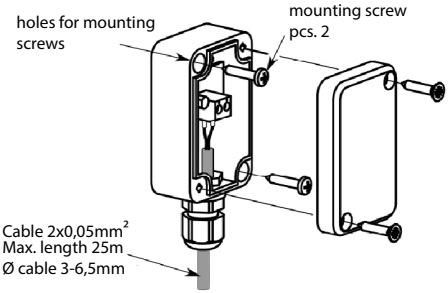

CHECK OF TEMPERATURE SENSORS

Temperature sensors can be checked by measuring their resistance at a given temperature. For the duration of the measurement, the sensor should be disconnected from the controller. If significant differences are found between the measured resistance value and the values in the table below, the sensor should be replaced.

CT6-P (Pt1000)			
Ambient temp. [°C]	Min. [Ω]	Nom. [Ω]	Max. [Ω]
0	999,7	1000,0	1000,3
25	1096,9	1097,3	1097,7
50	1193,4	1194,0	1194,6
100	1384,2	1385,0	1385,8

10CT-10 (NTC 10K)20	
Ambient temp. [°C]	Nom. [Ω]
-30	175200
-20	96358
-10	55046
0	32554
10	19872
20	12488
30	8059
40	5330
50	3605
60	2490
70	1753
80	1256
90	915,4
100	677,3
110	508,30

10CT-10 (NTC 10K)20	
120	386,60

4.7 ELECTRICAL CONNECTION OF ACTUATORS

NOTES: All measuring and actuating elements (sensors, pumps, valve actuators) to be controlled by PC KENSOL should be connected to the KT-Multi controller.

ELECTRICAL CONNECTION OF THE CIRCULATION PUMP TO THE CONTROLLER (230V AC)

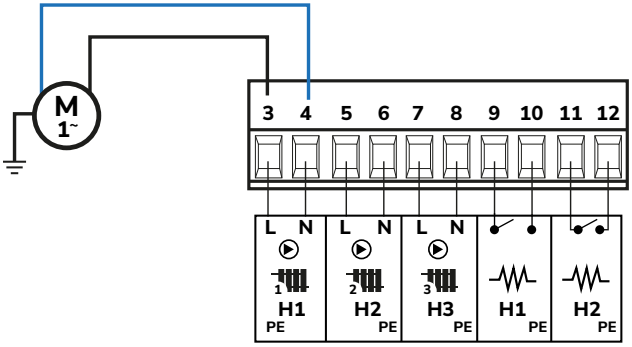

ELECTRICAL CONNECTION OF GZ PUMP (HEAT PUMP - BUFFER)

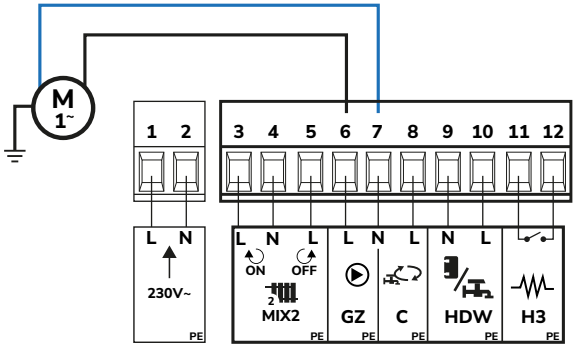

CONNECTION OF CH/DHW SWITCHING VALVE (230V AC)

KT-Multi controller works only with switching valves with one control phase (230V AC)

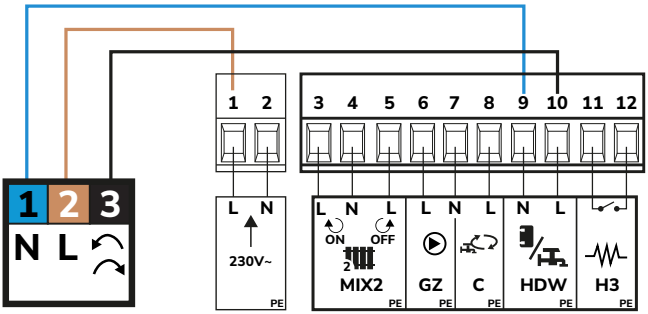

CONNECTION OF MIXING VALVES WITH ACTUATORS (230V AC)

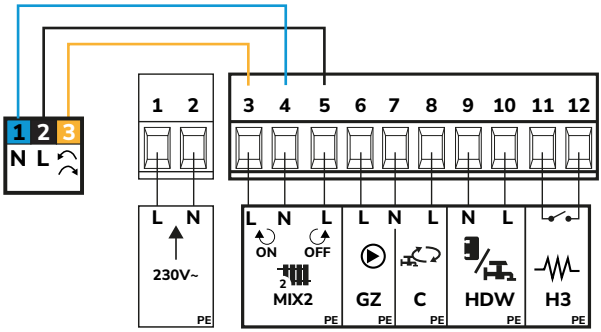

The electric actuator is installed only when there is a regulated circuit in the hydraulic system. The controller works only with valve actuators equipped with limit switches. The use of other actuators is prohibited.

CONNECTION OF A PEAK HEAT SOURCE IN THE FORM OF A FLOW-THROUGH ELECTRIC HEATER

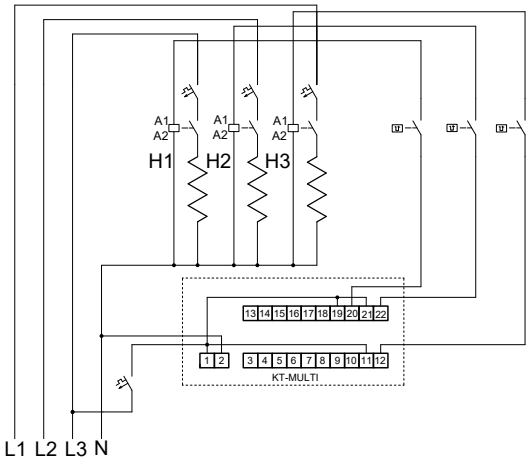

NOTES: The peak heat source in the form of a flow heater should be connected using external contactors. Connect the heater on the „working" contacts we connect, and the „control" contacts connect to the KT-Multi controller. In addition, the heater should be protected by a thermostat. It is recommended to use 3-stage heaters to take advantage of the capabilities of the controller and reduce operating costs.

ROOM PANEL CONNECTION

NOTES: The control panel can act as a room panel with an ambient temperature reading

In order for the room temperature to be stable, the settings associated with the thermostat or room

panel must be made. The panel or room thermostat supplements the weather control and corrects the water temperature of the regulated heating circuit if the room temperature is nevertheless incorrect. Assign a panel or room thermostat for each regulated heating circuit as described in the service menu.

4.8 CONNECTION OF ROOM THERMOSTAT

Connecting a room thermostat requires connecting a radio module to the G1 socket of the controller, according to the wiring diagram, and performing pairing between this module and the thermostat. To do this, enter the menu: User settings Radio settings Connecting to the thermostat and by confirming on Yes start the pairing function. For a description of the operation of the ductless room thermostat, see the instruction of this device.

Wired connection.

NOTES: Only one room panel can be connected directly to the G1 socket of the controller.

Connection of additional room panels requires an external power supply +5...12 V, with min. current = number of panels x 0.15 A. The cross-section of wires for panel connection should be at least 0.5 mm². The maximum length of the wires should not exceed 30 m. This length can be greater when using wires with a larger cross-section than 0.5 mm². The controller can handle a maximum of 30 room panels.

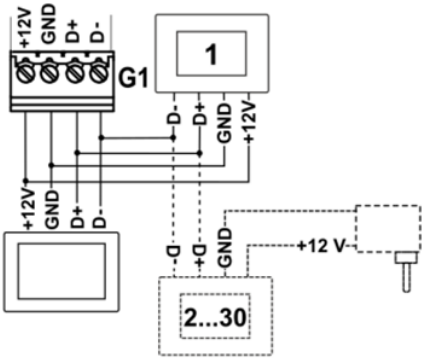

4.9 CONNECTION OF INTERNET MODULE

The ecoNET300 Internet module should be connected using the interface to the G2 socket of the regulator. Then enter the menu: User Settings ecoNET Setup Wizard or ecoNET Settings and configure the module's connection to the Wi-Fi network by entering the network SSID, password, and selecting the type of protection. You can check the connection status of the module to the Wi-Fi network and the econet24 server in the information: Status of ecoNET, Status of ecoNET WiFi. For a description of the Internet module and www.econet24.com, see the instructions for that module.

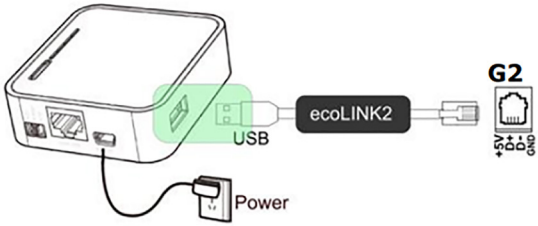

5. OPERATION OF THE CONTROLLER

The controller uses a touch panel screen. Operation of the controller and editing of parameters are done by touching the selected symbol on the screen. An example of the circulation setting screen is shown in the following figure.

THE MAIN SYMBOLS MEAN:

– heating circuit settings

– DHW settings (the symbol is not visible when there is no DHW service),

– settings of time schedules of heating circuits, DHW tank, heat pump,

– user Settings menu and Service Settings menu,

- selection of consecutive screens for circuits and the active screen (red) and the own name of the circuit, e.g. Living room.

– heat pump settings,

– heating installation diagram,

– heating circuits,

– cooling circuits,

– list of active alarms of the controller,

– active link to www.econet24.com

DOMESTIC HOT WATER

The controller controls the operation of the DHW pump and the pump that charges the DHW tank to the temperature set by the user. Hot water preparation can be programmed in time intervals. The controller also controls the hot water circulation pump.

HEATING CIRCUITS

The controller controls the operation of three heating circuits, including one with a mixer. The water temperature in the circuits can be set weather or fixed-temperature. Dependent circuits - the controller's control panel can be a common room thermostat for several circuits, for example, indications of the room temperature of the panel installed in the living room affect the operation of both the radiator circuit and the floor circuit. - Independent circuits - it is possible to connect several room panels, each of which will measure the room temperature separately and affect the circuits assigned to it. In this way, independent operation of the circuits is achieved, for example, when one part of the building is used year-round, while the other is used periodically.

5.1 SETTING THE DESIRED TEMPERATURE

The set temperature of the circuit and DHW tank is set by pressing the screen on the value of the current temperature of the circuit and DHW tank.

The set desired temperature is shown next to the symbol.

The outdoor temperature value is displayed next to the symbol .

Note: if the heater icon is displayed in the place of the current circuit temperature display, it means

that the circuit is not controlled by the room panel.

CIRCULATION SETTINGS

Pressing displays the parameters:

- Name of the circuit - own name of the circuit, e.g.. “Living room”.
- Hysteresis - when the water in the circuit reaches the set temperature, the circuit will be turned off. When the water temperature in the circuit drops by the value of the Hysteresis, the circuit will be switched on again.
- Day set temperature - the circulation temperature for the Day mode (Optimum temperature in the room that provides the best thermal comfort for the user, for example, during the day).
- Night set temperature - the temperature of the circuit for the Night mode (Temperature to which the temperature in the room will be reduced, for example, at night or when the user leaves the room).
- Pressing allows to select the circulation thermostat.

Options: None, Control panel, Wired thermostat, Wireless thermostat.

DHW SETTINGS

Pressing displays the parameters:

- DHW hysteresis - the DHW tank will be charged to the set temperature. When the water temperature in the DHW tank drops by the DHW Hysteresis value, the charging pump will be switched on again and the DHW tank will be reloaded.
- Minimum DHW hysteresis - the minimum settable value for DHW hysteresis.
- Extended DHW operation - when the DHW tank is loaded and the DHW pump is turned off, there may be a danger of overheating the heat source. This occurs when the DHW setpoint temperature is set higher than the heat source setpoint temperature. In order to cool the heat source, the operation of the DHW pump can be extended by the time set in this parameter.
- Antillegionella - activation of service of protection (disinfection) of DHW tank on the specified day para- meter Antillegionella - day and hour in the parameter Antillegionella hour.

Attention: Users should be advised of the anti-legionella function that is enabled, as there is a risk of scalding from hot service water.

5.2 TIME SCHEDULES

The controller uses daily time interval programming. In a situation where the user is away from home or it is nighttime, the controller can reduce the amount of supplied heat energy, which translates into savings in electricity consumption. Time schedules for lowering the setpoint temperature are set separately for the circuits and the circulation pump and can be set separately for each day of the week.

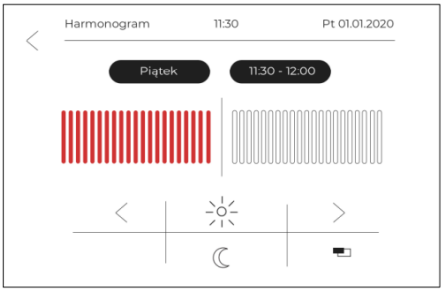

The ON/OFF time schedule is set separately for the heat pump and DHW cylinder and can be set separately for each day of the week.

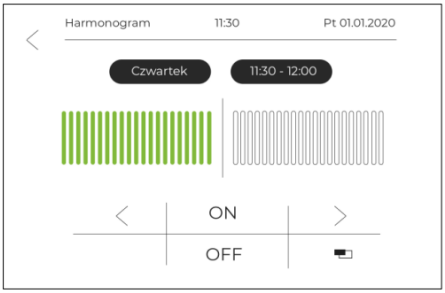

Meaning of symbols:

– selection of the day of the week and selection of the time interval. The daily interval is set every 30 minutes.

– copy the currently set time interval to any days of the week.

– room temperature setpoint is set to Night temperature setpoint for heating circuits. DHW tank and circulation pump are off.

– the room setpoint temperature is set to the Day Setpoint temperature for the circuits. The DHW tank is charged to the DHW Set Temperature.

The DHW circulation pump is turned on for the Circulation Run Time and turned off for the Circulation Standstill Time.

ON - the heat pump is on.

OFF - the heat pump is off

5.3 WEATHER CONTROL

Weather control can be enabled for the circuit. Enable operation of the outdoor temperature sensor and select Control Method = Weather. The temperature of the circulating water is set according to the temperature that prevails outside the building. The colder it is outside, the higher the temperature of

the circulating water. This relationship is expressed in the form of a heating curve.

The heating curve can be changed in the menu of the controller, in the range for the weather setpoint temperature, and is a reflection of the thermal characteristics of the building in question. The less insulated the building is, the higher the heating curve should be. The heating curve should be selected experimentally by changing it at intervals of several days.

Once the heating curve is properly selected, the set temperature of the circuit is calculated depending on the value of the outdoor temperature. Thus, with a heating curve suitable for the building, the room temperature will remain constant regardless of the temperature outside.

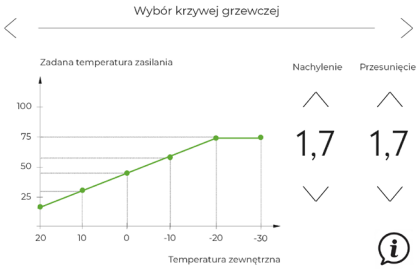

5.4 SETTING THE OPERATING MODES

The operating mode of the circuit and DHW tank that will suit the user's preferences is selected by the symbol on the circuit set temperature change screen and the symbol on the DHW set temperature change screen. The operation mode can be selected separately for the DHW tank and each heating circuit. If several circuits are assigned to a common control panel, the mode change is global and applies to all circuits simultaneously.

OPERATING MODES:

Day - The set temperature in the room is fixed and corresponds to the set value of the Set temperature of the day. The DHW tank constantly maintains the set temperature.

Auto - The set temperature in the room is maintained at the set time intervals as the Set Temperature of the day. Outside of the set time intervals, the circulation is off. For the DHW tank, the mode is unavailable.

Night - The set temperature in the room is fixed and corresponds to the set value of the Night Temperature Setpoint. For the DHW tank, this mode cannot be selected.

Auto - The set temperature in the room is fixed and corresponds to the set value of the Night Temperature Setpoint. Outside the set time intervals, the circulation is turned off. For the DHW tank, the mode is unavailable.

OFF - The controller switches off the given heating circuit or DHW tank.

Schedule - The room temperature setpoint is switched between Day Temperature Setpoint and Night Temperature Setpoint depending on the clock indications and the set time programs for each day of the week. The DHW tank is charged if the time interval corresponding to the Day Setpoint Temperature value lasts. For time programs corresponding to the Night set temperature value, the DHW tank is turned off.

ON - DHW mode enabled.

OFF - DHW operating mode disabled.

1 x Charging - it allows you to load the DHW tank once when the DHW tank heat-saving mode is active.

The user can select for the DHW tank the mode and periodically, if necessary, start the mode , this will save heat energy resulting from the DHW tank's standstill losses. Additional circuit mode is selected by pressing the currently displayed symbol on the main screen where the outdoor temperature value is displayed, . the symbol is usually .

ADDITIONAL OPERATING MODES

Auto - Automatically turns the heating-cooling mode of the circuit on or off depending on the value of the outside (weather) temperature. Automatic transition to auto mode is possible only with an external temperature sensor connected and when its operation is enabled (the cooling function of the heat source and individual circuits can also be unlocked).

Summer - The regulated circuit operates in cooling mode.

Winter - The regulated circuit operates in heating mode. For unregulated circulation, it is impossible to select this mode.

HEAT PUMP OPERATING MODES

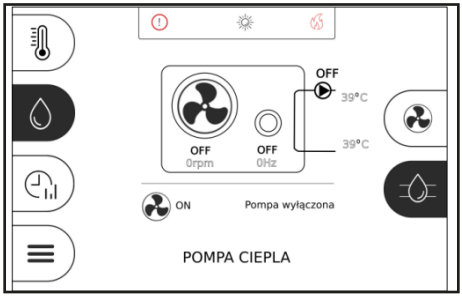

Heat pump modes are selected by pressing the symbol on the heat pump screen.

OPERATING MODE

ON mode - The heat pump is constantly on.

OFF mode - The heat pump is turned off regardless of the conditions in the system.

Schedule Mode - The heat pump is turned on and off depending on the set time schedule.

In addition, pressing the symbol displays a schematic of the supported installation.

NOTES: The view of the diagram depends on the enabled operation of individual circuits, DHW tank, buffer and whether an additional expansion module is connected to the controller.

5.5 USER SETTINGS

The controller settings according to the user's preference

- Time - setting the time. The controller uses the function of time synchronization with other connected room panels.

NOTES: Time synchronization will take place with a time difference between the room panel and the controller of min. 10 sec.

- Date - date setting.
- Panel address - allows you to assign an individual room panel address for the controller bus in case several room panels are connected to the controller.

NOTES: In order for the controller to work properly, individual room panels must have set different and consecutive addresses from the 100-132 pool.

- Language - select the language of the menu.
- Parental lock - allows you to lock the touchscreen from children. The lock turns on automatically after a period of inactivity. To unlock the controller, press the screen anywhere and hold for 4 sec..
- Alarm list - a list of alarms reported by the controller.

Pressing displays the parameters:

- Screen brightness - brightness of the screen.
- Screen saver - selection of screen saver: None, Blank Screen, Clock, Clock and Temperature.
- Time to screen saver - time to start the screen saver after idle time.
- Screen saver brightness - brightness of the screen when the screen saver is active.
- Alarm sound - enable or disable the alarm sound.
- Key sound - enable or disable the key sound when operating the controller.
- Panel temperature correction - correction of the room temperature value measured by the room panel. The room temperature should be measured with an additional temperature sensor and the resulting value of the difference between this measurement and the temperature value displayed by the room panel should be entered into the value of this parameter.

Pressing displays the parameters:

- ecoNET Configuration creator - go ahead to start configuring the ecoNET300 Internet module.
- Status ecoNET - information about the status of Wi-Fi and www.econet24.com server connection.
- Wi-Fi settings - configuration of the controller's connection to the Wi-Fi network, with the Internet module connected. Set the parameters: SSID, Security type, Network access password

Pressing displays: Diagnostic information about the operation of the controller, List of alarms, Software version (including factory number, UID, ISM). The Software Update selection allows you to update the controller's software.

5.6 COOPERATION WITH THE INTERNET MODULE

The regulator cooperates with the ecoNET300 Internet module which enables viewing and online control of the regulator via WiFi and www.econet24.com website, as well as the ecoNET. apk and ecoNET.app mobile applications. The mobile app can be downloaded from the QR code below.

SERVICE MENU - STRUCTURE

NOTES: Entering the menu requires entering the service password.

Default password [0000].

Additional features of the controller

POWER OUTAGE

In the event of a power outage, the controller will return to the operating mode it was in before the power outage.

FUNCTION OF PROTECTING PUMPS FROM STAGNATION

The controller performs the function of protecting the pump from stagnation. It involves turning it on periodically (every 167h for a few seconds). This protects the pump from immobilization due to scale buildup. Therefore, when the controller is not in use, the power supply to the regulator should be connected.

ALARMS

The controller reports alarms on the main screen with the symbol. Pressing the symbol ⓘ will display a list of active alarms.

6. DESCRIPTION OF SERVICE PARAMETERS

Service settings
Installation controller
Alarm list

Installation regulator
Heat pump scheme
Manual control
External sensor
Hydraulic scheme
Maine heat source
Heater settings
Heat pump settings
Buffer settings
Coupling settings
DHW settings
Circulation* settings

Circulation 1-3
Power meter
Default settings

External sensor
Outdoor temperature sensor operation
Sensor source
Summer mode activation temp.
Winter mode activation temp.

Main heat source
Operation of cooling
Temp. correction DHW
Buffer and circuit temperature correction
Setpoint correction - cooling*
Heat pump setpoint temp. manual
Heating setpoint temp.
Cooling setpoint temp.

Heater settings
DHW heater
Flow heater
Activation temp.
Time to turn on heater level 1
Time to turn on heater level 2
Time to turn on heater level 3

Clutch settings
Water setpoint temp.
Hysteresis of set temp.
Ice water temp.
Hysteresis of ice water temp.

Buffer settings
Operation mode
Buffer cooling
DHW settings
DHW operation
Circulation settings
Circulation operation
Circulation run time
Circulation stop time
Start from temperature
Pump start temperature

Circulation 1
Operation of Circulation
Name of Circulation
Type of Circulation
Control method
Operation mode
Circulation heating
Fixed water setpoint temperature*
Heating curve*
Room temp. factor
Pump lock from

Circulation 2-3
Circulation operation
Circulation name
Circulation type
Pump only
Control method
Operation mode
Circulation heating
Circulation cooling
Fixed water setpoint temperature*
Fixed water setpoint temperature - cooling*
Reduction of water temperature
Heating curve*
Minimum temperature
Maximum temperature
Thermostat
Room temperature coefficient
Block pump from thermostat
Valve opening time
Proportionality range
Integration time constant
Mixer insensivity

Current consumption
Current measurement
Falling edge
Rising edge
Number of pulses for 1kWh
Resetting meters
Removal of periodic meter
Removal of meters - SCOP average
Removal of meters - SEER average

NOTE: * item unavailable if the corresponding sensor is not connected or if the setting of another parameter made this item hidden.

NOTE: The controller at the first configuration has disabled operation of all heating circuits, DHW tank, buffer, circulation pump.

Depending on the hydraulic installation used, these circuits should be included.

Heat pump diagram - Diagramof internal heat pump construction.

1. It shows, among other things, the temperatures of the exchanger, before and after the compressor, as well as the supply and return temperatures of the upper source.
2. Manual control - The menu allows you to separately turn on individual components of the heating system and carry out tests on the correct operation of the selected device. Turning the selected device on or off is done by pressing the symbol on the screen.

NOTE: The controller does not check the protection logic of automation components, so this menu should be used with caution and awareness of switching outputs, so as not to damage the controller and devices connected to its terminals. Prolonged and uncontrolled leaving of devices on, for example, pumps, can lead to their damage

3. External sensor - The menu contains settings for an external temperature (weather) sensor.

- Outdoor temperature sensor operation - enable or disable the operation of the external (weather) temperature sensor. The sensor can be connected to the heat pump or directly to the controller.
- Sensor source - selection of handling the outdoor temperature sensor depending on its connection: ecoMULTI, Heat pump.
- Summer mode temp on - external temperature at which summer mode is switched on. Winter mode temp off - external temperature at which summer mode is turned off

4. Hydraulic diagram - Selection of the supported hydraulic diagram of the system for the heat pump. To choose: Heat buffer, Direct system.
5. Main heat source - The menu contains settings related to the heat pump.

- Cooling operation - enable the cooling function of the circuits.
- Temp correction DHW - correction (increase) of the set temperature of DHW in heating mode.
- Buffer and circuit temperature correction - correction (increase) of the buffer setpoint temperature against the heating circuit setpoint temperature in heating mode.
- Setpoint temperature correction - cooling - correction (lowering) of the buffer setpoint temperature against the heating circuit setpoint temperature in cooling mode.
- Heat pump setpoint temperature manually - operation of manual change of heat pump setpoint temperature in heating and cooling mode. With the operation disabled, the heat pump's setpoint temperature is set based on changes in the external temperature.
- Heating setpoint temperature - the setpoint temperature of the heat pump during heating mode. The value is set when operation is enabled in Heat pump setpoint temperature manually.
- Cooling setpoint temperature - the setpoint temperature of the heat pump during cooling mode. The value is set when operation is enabled in Heat pump setpoint temperature manually.

6. Heater settings - Menu related to operation of DHW heater and flow heater, which support heating of DHW tank, buffer, circuits.

- DHW heater - enable or disable operation of the DHW heater.
- Flow heater - enable or disable the operation of the flow heater.

- Activation Temp - the value of the outdoor temperature, when exceeded, the DHW heater or flow heater will be activated.
- Time to turn on the heater - time to turn on the DHW heater after exceeding the Activation Temp.
- Time to switch on the heater level 1 - the delay time for switching on the 1 level of the flow heater after switching on the heat pump, if the heat pump is not able to heat the circuits at this time.
- Time to switch on the heater level 2 - the delay time for switching on the 2 level of the flow heater after switching on the 1 level of the heater for further heating.
- Time to switch on the heater level 3 - the delay time for switching on the 2 level of the flow heater after switching on the 2 level of the heater for further heating.

7. Heat pump settings - Heat pump service settings as recommended by the heat pump manufacturer.
8. Buffer settings - The menu contains settings for the heat buffer.

- Buffer handling - enable or disable buffer handling.
- Buffer mode - selection of the number of temp sensors with which the buffer will operate. To choose: One Sensor, Two Sensors.
- Buffer cooling - enable the function of cooling the circuit by generating chilled water in the buffer.
- Setpoint temperature - the value of the buffer setpoint temperature.
- Setpoint temp. hysteresis - if the current temperature of the buffer drops to the value of the setpoint temp. minus the hysteresis in this parameter, the buffer will be heated.
- Start temperature of the system heating - the circuit pumps will be switched on when the temperature of the buffer rises above this parameter.
- Cooling installation start temp - the circuit pumps will be turned on when the buffer temperature drops below this parameter.
- Ice water temperature - the value of the set temperature of ice water generated by the buffer. The parameter is available only when the circuit cooling function is enabled.
- Ice water temperature hysteresis - if the temperature of the ice water exceeds the ice water temperature by the hysteresis value in this parameter, the heat pump will stop producing ice water. The parameter is available only when the circuit cooling function is enabled.

9. DHW settings - The menu contains settings related to the operation of the DHW tank.

- DHW operation - enable or disable operation of the DHW tank.

10. Circulation settings Menu - contains parameters related to the operation of the DHW circulation pump.

- Circulation operation - enable or disable the operation of the DHW circulation pump.
- Circulation time - the time of operation of the circulation pump after a break in its operation. The circulation pump runs intermittently for the time set in the Circulation Interval Time parameter.
- Circulation pause time - the stopping time of the circulation pump during its operation. The circulation pump operates for the time set in the Circulation Operation Time parameter.
- Start from temperature - switching on or off the operation of the circulation pump depending on the DHW tank temperature.

- Pump Start Temperature - in order to save energy, the circulation pump will be turned off when the DHW tank temperature is lower than the Pump Start Temperature.

11. Circuit 1 - Menu related to the operation of the unregulated circuit. The set temperature of unregulated circuit 1 is automatically increased to guarantee the heat supply for regulated circuits 2 and 3.

- Circulation support - enable or disable circulation support.
- The name of the circuit - the own name of the circuit set by the user.
- Circulation heating - activation of the circulation heating function.
- Fixed water setpoint temperature - when Control Method = Fixed Value, then the heat pump is turned off when the value in this parameter is reached. The parameter is not available when Control Method = Weather.
- Heating curve - represents the thermal characteristics of the building. The higher the heating curve, the higher the circulating water temperature. The parameter becomes available when Control Method = Weather.
- Thermostat - enable or disable the influence of the room thermostat on the operation of the circuit and select the room thermostat for the circuit: Control Panel, Wireless Thermostat.
- Room temp. factor - when the thermostat operation is enabled, the automatic correction of room temp. occurs according to the formula: Correction = (Setpoint room temperature - measured room temperature) x Room temperature coefficient /10. It is necessary to find the correct value of the Room Temperature Factor parameter. The higher the value of the coefficient, the greater the correction of the setpoint temperature of the circuit. When set to the value of „0", the setpoint temperature of the circuit is not corrected. Note: setting the room temperature coefficient too high may cause cyclic fluctuations in room temperature.

* Type of circuit - Selection of the type of unregulated circuit used.

The choices are:

- Radiator heating - the circuit is on and serves the radiator circuit.
- The fan coil - circuit can operate in cooling or heating mode. When selecting Fan coil and setting the additional mode to:
- Summer - the circuit performs the cooling function.
- Winter - the circuit performs the heating function.
- Auto - the circuit performs the heating or cooling function depending on the outside temperature. Note: selecting any of the circuits as a Fan-coil, with the additional Summer mode active, will always result in the second circuit not being heated. Cooling has a higher priority

* Control method - Selection of the control method for the unregulated circuit.

- Constant-value - a constant setpoint temperature of water in the unregulated circuit is maintained.
- Weather - the temperature of water in the unregulated circuit refers to changes in the value of the outside temperature. The parameter is invisible when the outdoor temperature sensor is not connected.

*Operating mode - Selection of the operating mode of the circuit.

- Off - the circuit is turned off.

- Day - the higher set temperature of the circuit is set.
- Night - a lower set temperature of the circuit is set (5°C reduction).
- Schedule - Day or Night mode is set according to the time schedule.

* Operation mode - Selection of the operation mode of the circuit.

- Off - the circuit is turned off.
- Day - the higher setpoint temperature of the circuit is set.
- Night - a lower setpoint temperature of the circuit is set (5°C reduction).
- Schedule - Day or Night mode is set according to the time schedule.

*Pump lock from thermostat Circuit pump lock when operating the room thermostat of the circuit. The choices are:

- Off - when the set temperature in the room is exceeded, the circulation pump is not blocked.
- On - exceeding the set temperature in the room will block the circulation pump.

12. Circuit 2 - Menu related to the operation of the regulated circuit.

Note: description as for circuit 1 - in addition:

- Circulation cooling - activation of the circulation cooling function.
- Minimum temperature - the minimum setpoint temperature of water in the regulated circuit.
- Maximum temperature - the maximum setpoint temperature of water in the regulated circuit. If you set, for example, Maximum temperature > 55°C and Circulation Type = Underfloor heating, the controller will still assume a maximum value of 55°C to avoid the risk of scalding.
- Fixed water setpoint temperature - cooling - the mixing valve closes when the value in this parameter is reached. If the parameter „Pump only" is selected, then when the set temperature is reached, the circulation pump is turned off.
- Lowering the water temperature - lowering the set temperature of the circuit in case of setting the manual mode to Night or in case of a schedule.
- Valve opening time - the time at which the mixing valve will open (or close) from one end position to another.

* Type of circuit - Selection of the type of unregulated circuit used.

The choices are:

- Radiator heating - the circuit is on and serves the radiator circuit.
- Underfloor heating - the circuit is on and operates the floor circuit. With this setting, the controller ensures that the limit temperature in the floor circuit is not exceeded. High temperatures in the floor circuit can damage the floor structure and burn users.
- The fan coil - circuit can operate in cooling or heating mode.

When selecting Fan coil and setting the additional mode to:

- Summer - the circuit performs the cooling function.
- Winter - the circuit performs the heating function.
- Auto - the circuit performs the heating or cooling function depending on the outside temperature.

NOTE: selecting any of the circuits as a Fan-coil, with the additional Summer mode activated, will always result in the second circuit not being heated. Cooling has a higher priority.

* Only the pump

- No - the circulation pump is not blocked when the set room temperature is exceeded.
- Yes - when the set temperature in the room is exceeded, the circuit pump is blocked and the circuit mixer actuator stops.

12. Circuit 3 - Menu related to the operation of the regulated circuit.

The settings for regulated circuit 3 are analogous to those for regulated circuit 2.

13. Electricity meter - Electricity meter settings.

- Current measurement - selection of current measurement method depending on the type of connected meter: None, Impulse.
- Falling edge - counting pulses at the falling edge of the signal.
- Rising edge - counting pulses at the rising edge of the signal.
- Number of pulses for 1 kWh - setting the number of pulses as will be per 1kWh of electricity consumed for the pulse meter.
- Clearing counters - resetting the counters for SCOP and SEER.
- Removal of the periodic counter - resetting the pulse counter counting periodic electricity consumed.
- Deletion of counters - average SCOP - resetting the counters of counting the efficiency factor of electricity consumption in heating mode.
- Deletion of counters - average SEER - resetting the counters for counting the efficiency factor of electricity consumption in cooling mode.

14. Default Settings - Setting Default Settings to Yes deletes all parameter changes made in the controller control panel or controller module and restores the default (factory) settings.
15. Alarm list - List of alarms reported by the controller.

6.1 SAMPLE INSTALLATION DIAGRAMS AND SUGGESTED SETTINGS

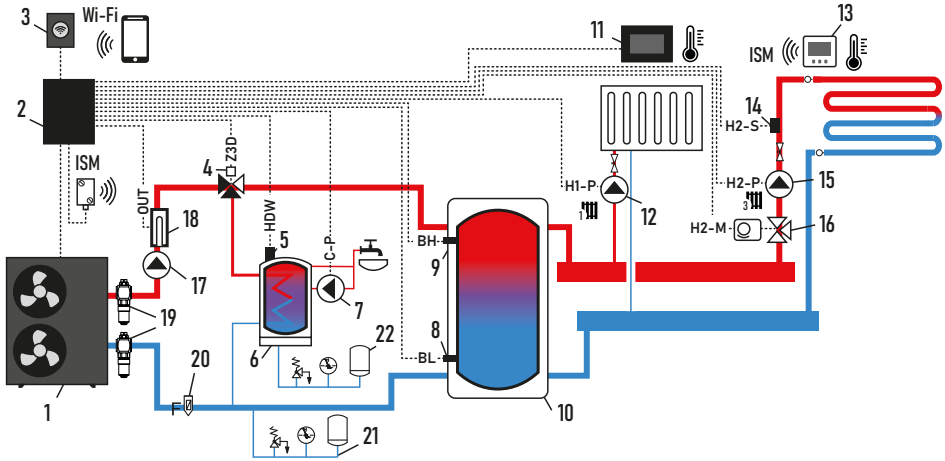

Diagram with heat buffer and DHW tank: 1 - KENSOL KTM heat pump, 2 - KT-MULTI controller, 3 - Internet module, 4 - 3-way valve, 5 - DHW tank temp sensor, 6 - DHW tank, 7 - circulation pump, 8 - lower buffer temperature sensor, 9 - upper buffer temperature sensor, 10 - heat buffer, 11 - control panel with room thermostat function, 12 - circulating pump I circuit 1, 13 - wireless room thermostat, 14 - mixer temp sensor 2, 15 - circulating pump II circuit 2, 16 - mixing valve with actuator, 2, 17 - circulating pump, 18 - flow heater, 19 - antifreeze protection, 20 - magnetic separator + mesh filter, 21 - central heating safety group, 22 - DHW safety group.

SUGGESTED SETTINGS:

	Parameters	Settings	Menu
	Hydraulic diagram	Buffer	Installation controller - Hydraulic diagram
	Buffer mode	Two sensors	Installation controller - Buffer settings
1	Handling the circulation	YES	Installation controller - Circuit 1
	Circulation type	Underfloor heating	Installation controller - Circuit 1
	Control method	Weather	Installation controller - Circuit 1
	Thermostat	Wireless thermostat	Installation controller - Circuit 1
	Maximum temperature	55°C	Installation controller - Circuit 1
3	Circulation operation	YES	Installation controller - Circuit 3
	Circulation type	Underfloor heating	Installation controller - Circuit 3
	Control method	Weather	Installation controller - Circuit 3
	Thermostat	Wireless thermostat	Installation controller - Circuit 3
	Maximum temperature	55°C	Installation controller - Circuit 3
	DHW operation	YES	Installation controller - DHW settings

	Parameters	Settings	Menu
	Circulation operation	YES	Installation controller - Circulation settings
	Flow heater	YES	Installation controller - Heater settings

SCHEME WITH HEAT BUFFER AND HOT WATER STORAGE TANK (COOLING FUNCTION):

1 - heat pump, 2 - controller, 3 - internet module, 4 - 3-way valve, 5 - DHW tank temp sensor, 6 - DHW tank, 7 - circulating pump, 8 - lower buffer temp sensor, 9 - upper buffer temp sensor, 10 - heat buffer, 11 - control panel with room thermostat function, 12 - mixer 1 pump, 13 - wireless room thermostat, 14 - mixer 3 temp sensor, 15 - mixer 3 pump, 16 - mixer 3 actuator, 17 - mixer 2 actuator, 18 - mixer 2 pump, 19 - mixer 2 temp sensor, 20 - DHW pump, 21 - flow heater.

Suggested settings

NOTE: In the cooling function, the mixer actuators are closed to prevent cold water from entering the radiator and underfloor heating.

SOFTWARE UPDATE

Replacement of the program can only be done with a memory card of microSD HC type only (maximum 32 GB, FAT32 file format). Before starting to change the program, unplug all external devices that work with the controller. To replace the program, disconnect the controller's electrical power or turn it off with the mains switch, then insert the memory card into the indicated slot of the panel. Location of the memory slot in the panel. The memory card should store the new software in the form of *.pfc for the panel and *.pfi for the module. Put the new software directly on the memory card, without saving the data in the subdirectory. Next, connect the electric power supply to the controller, enter the user menu and perform program replacement first in the controller module and then in the panel.

NOTE: After the update, it is necessary to perform a service reset and check the settings. In case of problems, it is recommended to restore the default (factory) settings and, after a prolonged power outage, load the current configuration.

REGISTER OF CHANGES:

The manufacturer reserves the right to make improvements and modifications to the equipment.

The manufacturer reserves the right to change the contents of this manual without notifying users of the changes.

kensol HVAC

v 26.09.2025